MECHANICAL SERVICE PARTS LIST



NUFFIELD TRACTOR WITH B.M.C. DIESEL ENGINES

3 DL WITH 2·6-LITRE 3-CYLINDER
342 WITH 2·6-LITRE 3-CYLINDER
342 WITH 2·8-LITRE 3-CYLINDER
10/42 WITH 2·8-LITRE 3-CYLINDER
4 DM WITH 3·4-LITRE 4-CYLINDER
460 WITH 3·8-LITRE 4-CYLINDER
10/60 WITH 3·8-LITRE 4-CYLINDER

NUFFIELD TRACTOR

MODELS

3 DL · 342 · 10/42
4 DM · 460 · 10/60

Issued by

The British Motor Corporation Limited
BMC Service division
COWLEY · OXFORD · ENGLAND

Telephone - - - - - - - - - - - - Oxford 78941
Telex - - - - - - - - BMCSERV. Oxford 83145 and 83146
Telegrams - - - - - - - - - BMCSERV. Telex. Oxford
Cables - - - - - - - - BMCSERV. Telex. Oxford England
Codes - - - - - - Bentley's, Bentley's Second Phrase, A.B.C. (5th and 6th Editions), Western Union and Private

INDEX	
Engine	MA
Cooling System	MC
Fuel System	MD
Clutch	ME
Gearbox Transmission	MF
Steering Details	MG
Front Axle	MH
Brake Linkage	MJ
Electrical	MK
Instrument Panel	ML
Wheels	MM
Bonnet Mudguards	MN
Drawbar	MO
Tools	MP
Optional Equipment	MR
Independent Power Take-off	MS

(61097)
© THE BRITISH MOTOR CORPORATION LIMITED 1968
Issue 3

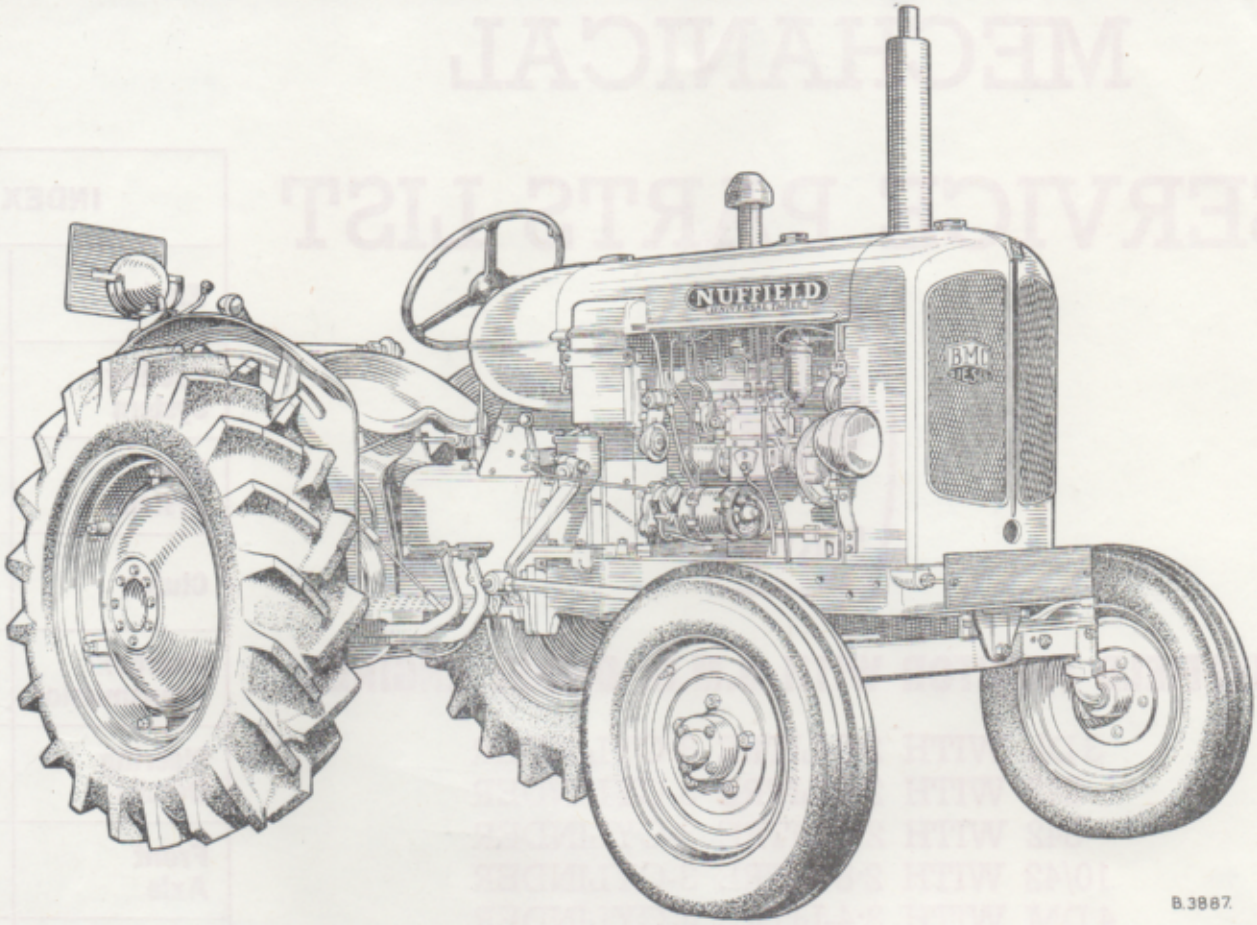

The Nuffield 3-cylinder Tractor—Model 3 DL

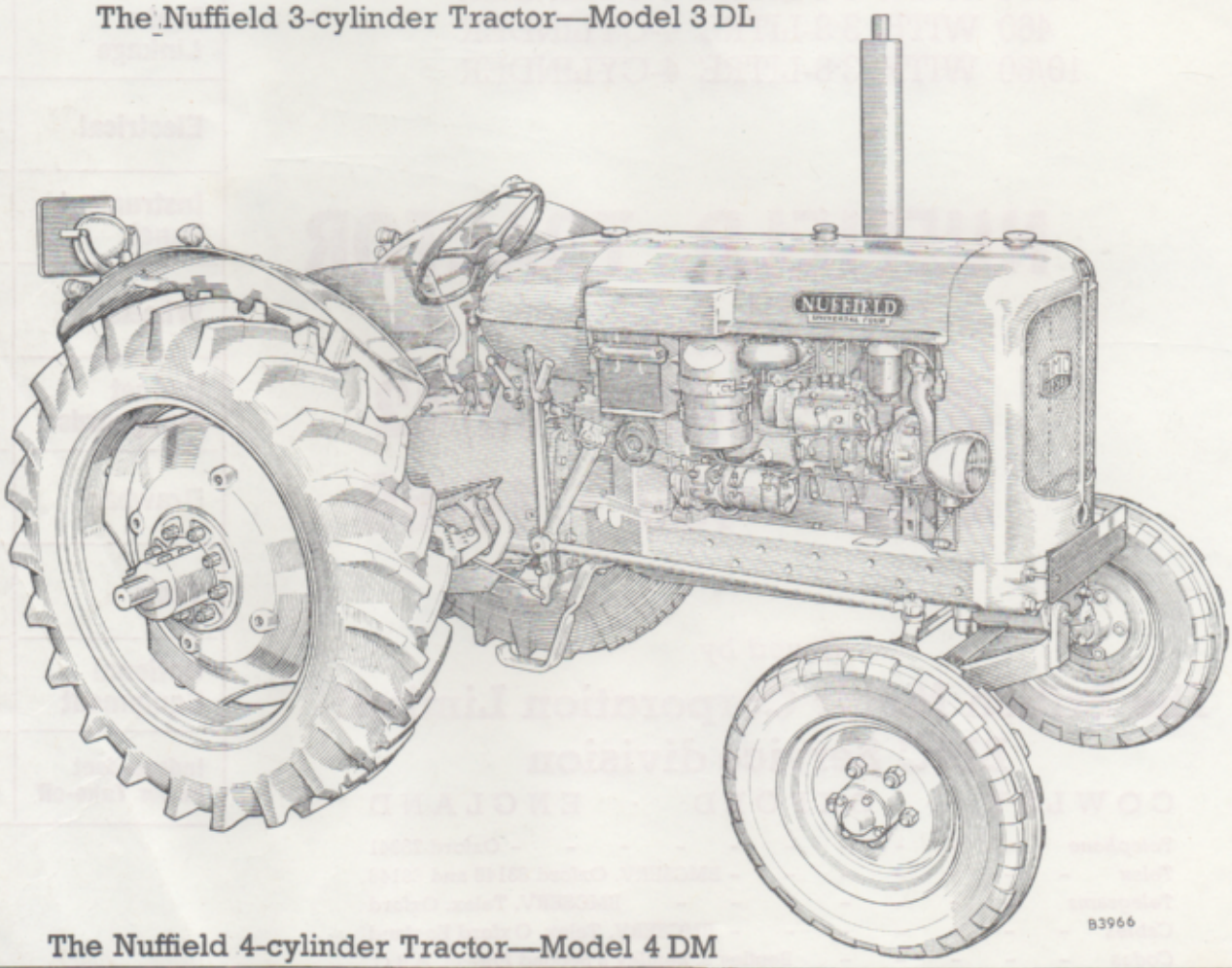

The Nuffield 4-cylinder Tractor—Model 4 DM

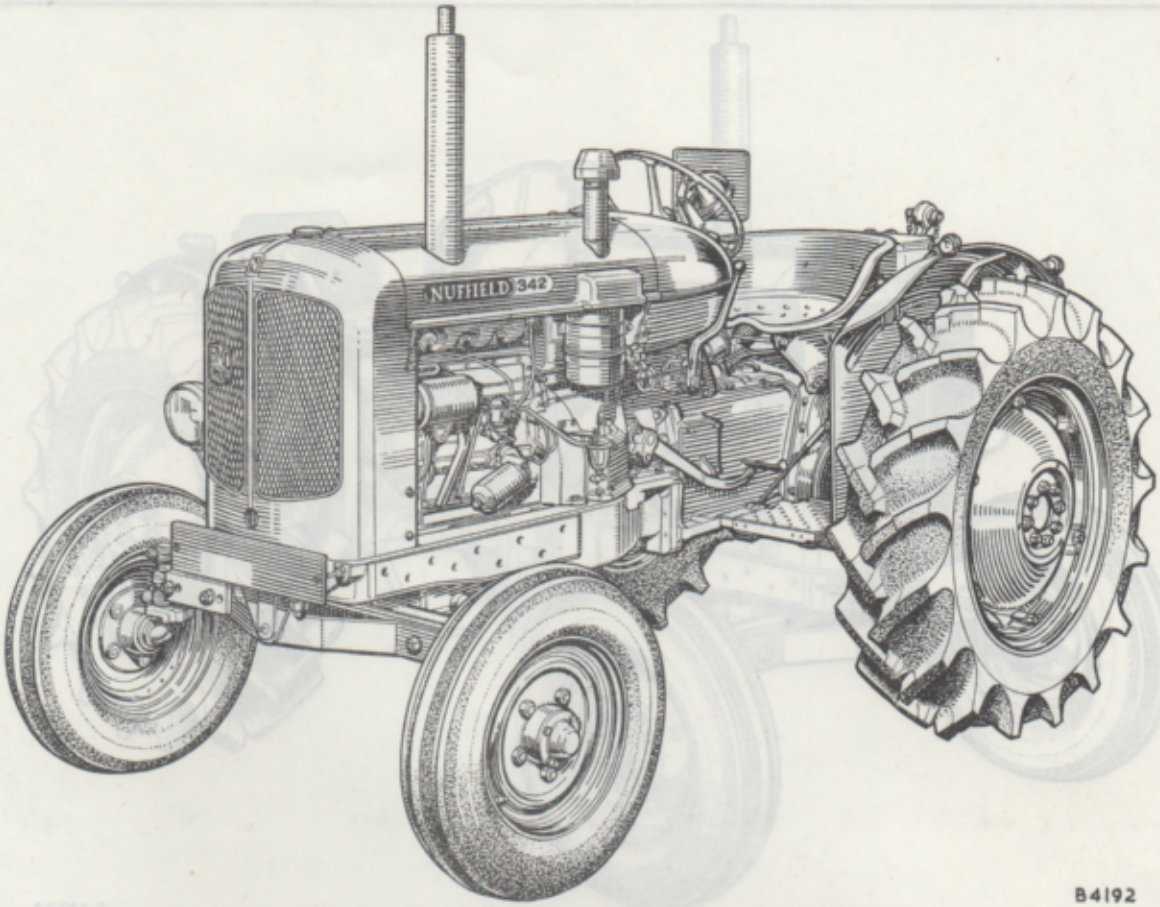

B4192

The Nuffield 3-Cylinder Tractor—Model 342

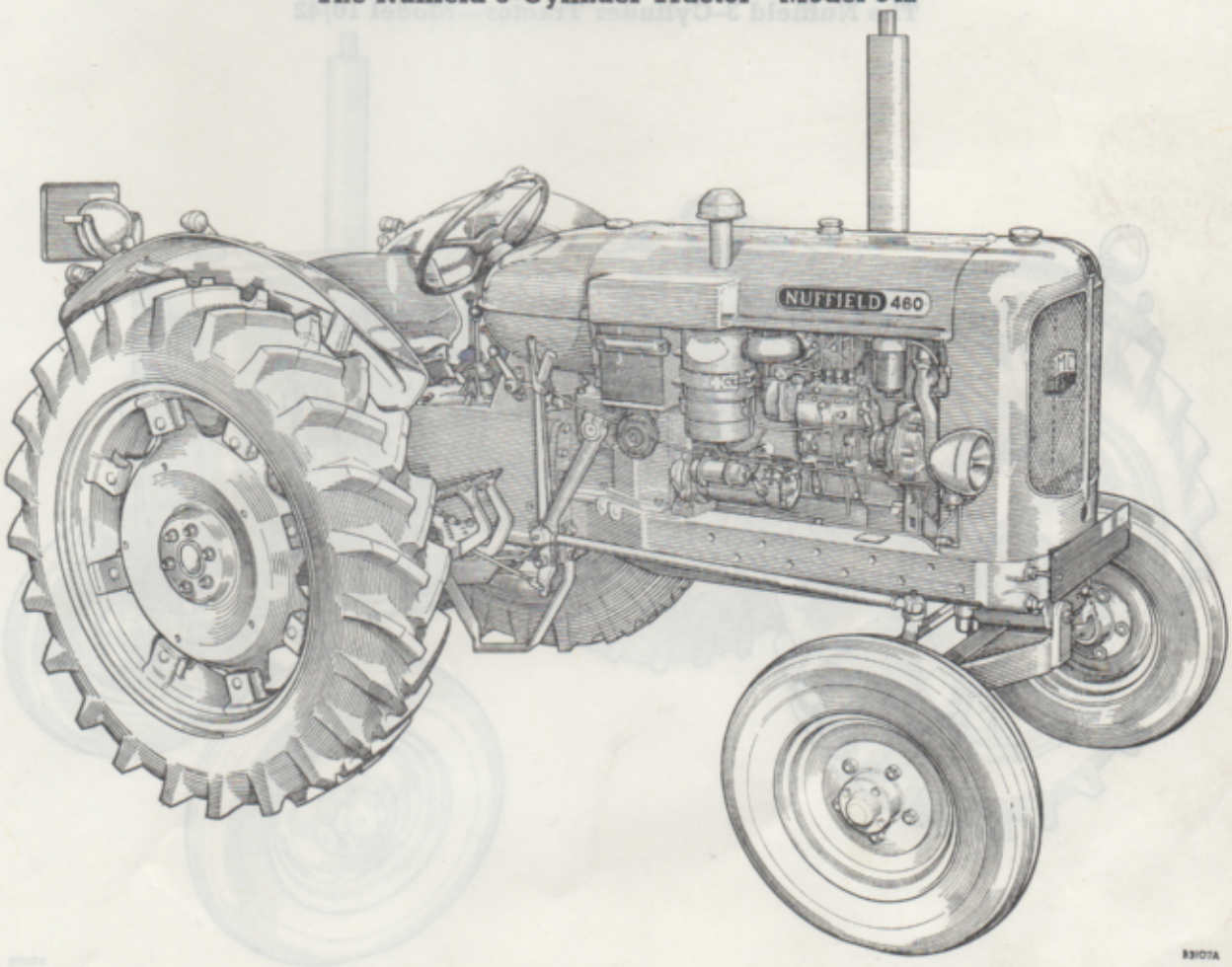

B3107A

The Nuffield 4-Cylinder Tractor—Model 460

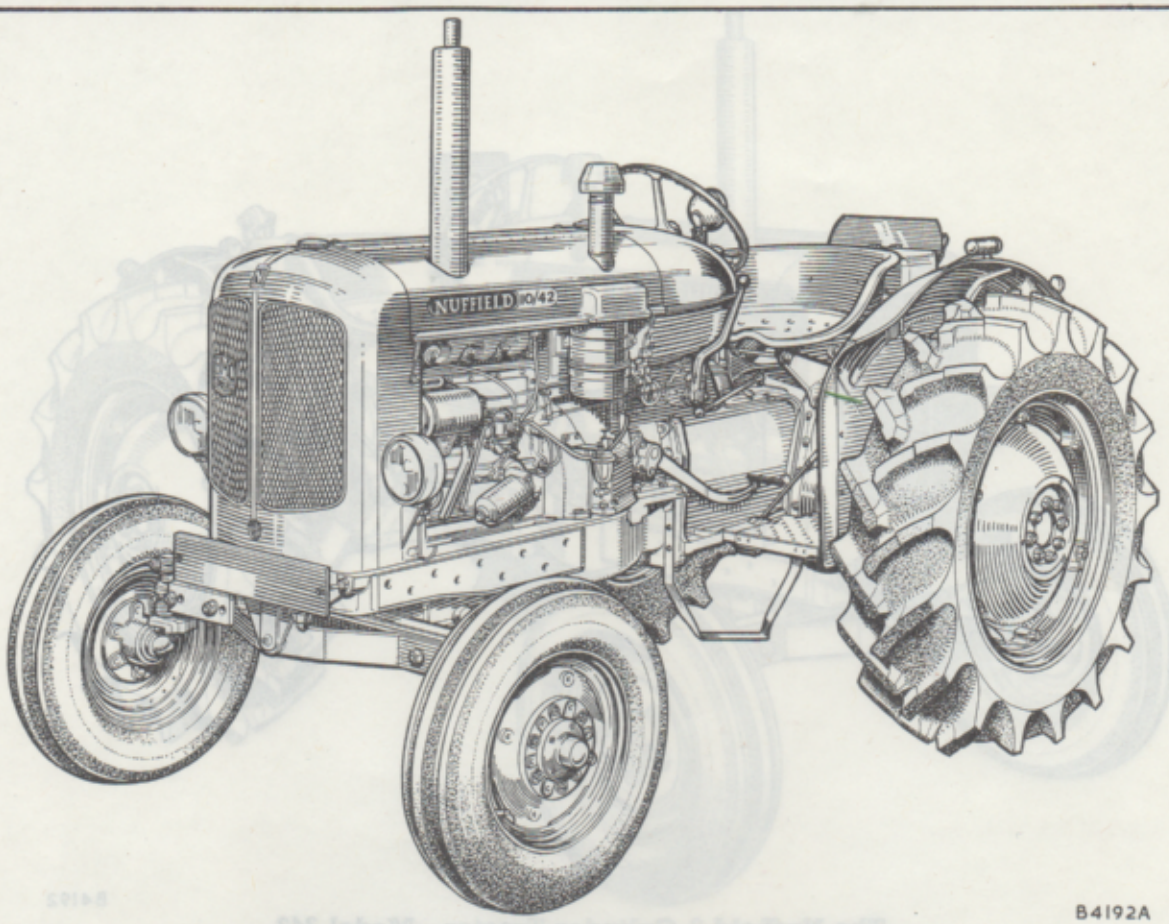

B4192A

The Nuffield 3-Cylinder Tractor—Model 10/42

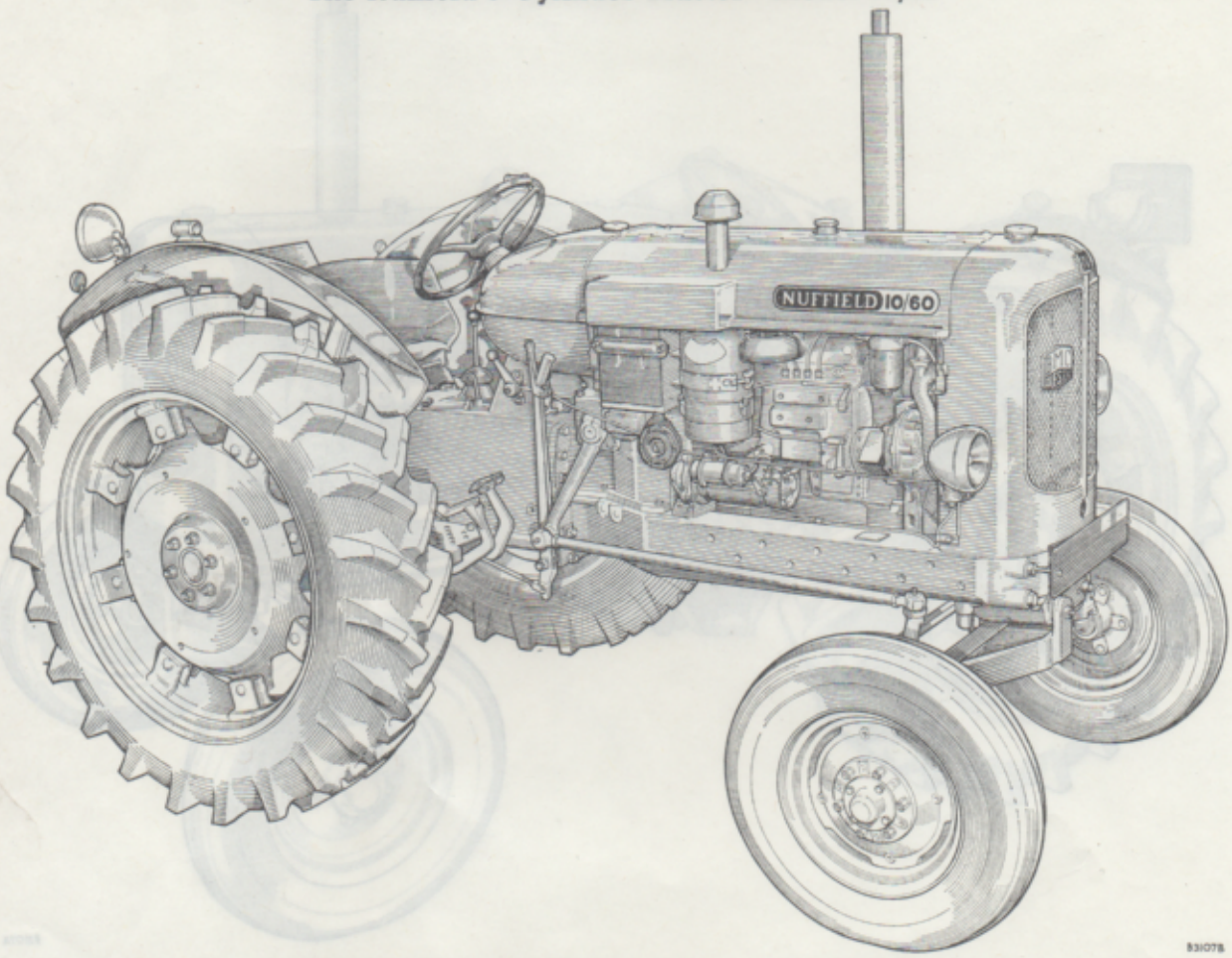

831078

The Nuffield 4-Cylinder Tractor—Model 10/60

EXPLANATORY

- Amendments to this List will be effected by means of reprinted pages. Should it be necessary to add an additional page or pages to interrupt the existing sequence of page numbers, the added pages will be numbered as in the following examples, which illustrate what would happen if it became necessary (A) to extend the information on a text page beyond the limits of that page or (B) to add an illustration page between existing illustration pages. Use of the decimal notation avoids the necessity of renumbering and reprinting all pages after the newly introduced page.

Example (A)

Existing text pages	MA 5, MA 6, MA 7, etc.
Added text pages	MA 5·1, MA 5·2, MA 5·3.
Page sequence will then read	MA 5, MA 5·1, MA 5·2, MA 5·3, MA 6, etc.

Example (B)

Existing plates	A 5, A 6, A 7, etc.
Added plates	A 5·1, A 5·2, A 5·3.
Parts List will then read	A 5, A 5·1, A 5·2, A 5·3, A 6, etc.

- Where a modification to a part has taken place, or a new part issued replacing an original part, this is indicated by the inclusion of a dagger against the new or amended part.

- It will be noted that the items comprising an assembly (or sub-assembly) are offset for easy reference. This principle is followed in all Parts Lists, typical examples being given below.

Examples

Tank assembly—fuel	**NT 4982**
Cap filler	NT4668
Beam—axle—main	**NT 4972**
Bush	NT 3004

- ABBREVIATIONS

Standard abbreviations are employed. The complete range of abbreviations covering all Lists is given below.

A	**Ambulance**	**ID**	**Inside diameter**	**PSV**	**Public service vehicle**
A/R	**As required**	**I.P.T.O.**	**Independent Power Take-off**	**(RA)**	**Rear axle number**
(B)	**Body number**			**RH**	**Right-hand**
(BP)	**Belt pulley**	**J**	**Convertible**	**RHD**	**Right-hand drive**
C	**Chassis number**	**K**	**Truck**	**RHT**	**Right-hand thread**
(C)	**Car number**	**L**	**Hire Car**	**(RP)**	**Rear Pulley**
(CB)	**Cab number**	**LC**	**Low compression**	**S**	**4-door Saloon**
(CN)	**Commission number**	**LH**	**Left-hand**	**(S)**	**Super de-luxe**
CP	**Chrome-plated**	**LHD**	**Left-hand drive**	**2S**	**2-door Saloon**
D	**Coupe**	**LHT**	**Left-hand thread**	**T**	**4-seater Tourer**
(D)	**De-luxe**	**M**	**Limousine**	**U**	**Pick-up**
DC	**Double-coil**	**N**	**2-seater Tourer**	**UK**	**Gt. Britain and Northern Ireland**
E	**G.P.O. Engineers**	**No.**	**Number**		
(E)	**Engine number**	**NSP**	**Non-serviceable part**	**U/S**	**Undersize**
EXP	**Export**	**OD**	**Outside diameter**	**V**	**Van**
(FA)	**Front axle**	**(OD)**	**Overdrive number**	**W**	**Dual-purpose (wood framing)**
G	**G.P.O. Mail**	**O/S**	**Oversize**		
(G)	**Gearbox number**	**P**	**Hard Top**	**Ws**	**Dual-purpose (all-metal)**
H	**Hearse**	**P.T.O.**	**Power Take-off**		
HC	**High compression**	**Q**	**Chassis and Cab**	**X**	**Taxi**
(HU)	**Hydraulic unit**	**R**	**Chassis and Scuttle**		

†Revised Information. Issue 2

BMC Service Parts List Spine Labels

These have been designed with a colour code to enable users to file or find Parts Lists readily. The system is as follows:

Coloured rectangles at top of spine

'Families' of passenger cars will always have a common colour (e.g. Lilac for the BMC Minis).

Heavy commercial vehicles will have a common colour throughout—Red.

Light commercial vehicles will have a common colour throughout—Grey.

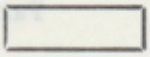

Second coloured rectangle

This indicates what the List deals with, as under:

Red	Mechanical.	Tan	Power Unit (Diesel).
Light Blue ...	Body.	Magenta ...	C.V. Chassis.
Brown ...	Power Unit (Petrol).	Deep Yellow ...	C.V. Body and Cab.
Pink	Engines.		



Coloured circles

These indicate the franchises covered by the list. For any particular franchise the circle will always appear at the same height on the spine label. Additionally, it will be coloured as under:

Blue	Austin.	Pink	Wolseley.
White	Morris.	Maroon	Vanden Plas.
Yellow ...	M.G.	Stone	Austin Commercial.
Grey	Riley.	Green	Morris Commercial.



Title-page

For easy identification when the list is lying flat, the colour of the text of the title-page repeats that on the spine label, indicating whether the list is Mechanical, Body, etc.

IMPORTANT TO OWNERS

SERVICE

B.M.C. SERVICE PARTS

All authorized B.M.C. Distributors and Dealers are under contract to supply only B.M.C. Genuine Parts.

Make certain your Invoice always bears this label



Replacement parts that are not of genuine B.M.C. manufacture cannot be relied upon to be of B.M.C. specification, material, and workmanship, and therefore B.M.C. cannot be expected to extend their Warranty to vehicles which have been fitted with parts not of their manufacture.

A comprehensive range of EXCHANGE UNITS is available. Ask your Distributor or Dealer for full details.

In order to ensure prompt and correct execution of your orders it is essential to:

STATE THE TRACTOR NUMBER AND UNIT NUMBER, COMPLETE WITH PREFIXES AND SUFFIXES.

GIVE THE PART NUMBER AND DESCRIPTION (PREFIX LETTERS TO PART NUMBERS MUST ALWAYS BE QUOTED).

Location of Unit Numbers

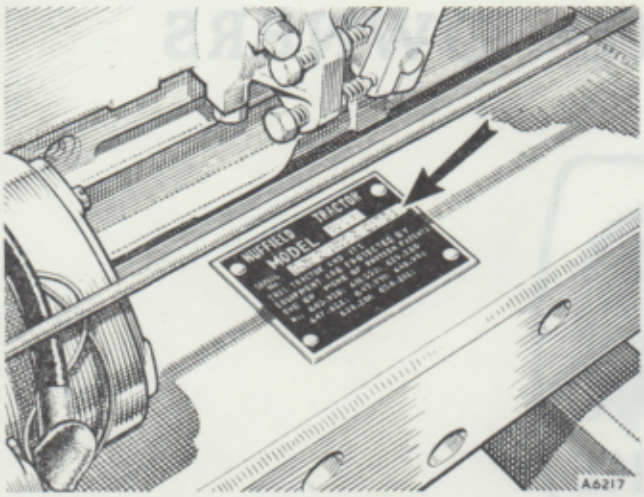

The **Tractor Serial Number** is stamped on a plate attached to the right-hand side of the frame, adjacent to the radiator

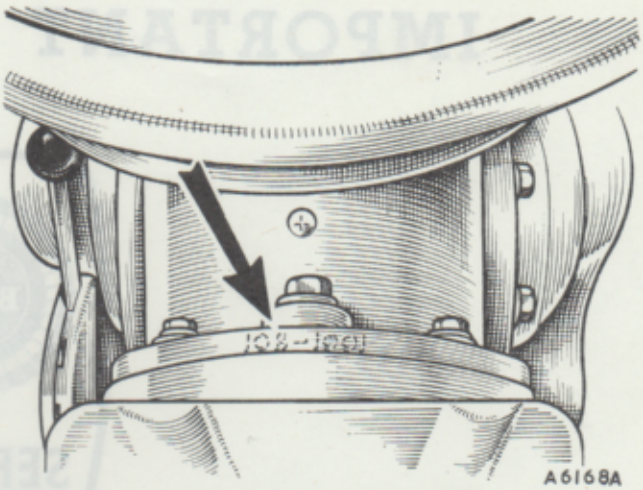

The **Gearbox Serial Number** is stamped on the top rear flange of the gearbox case immediately under the driver's seat

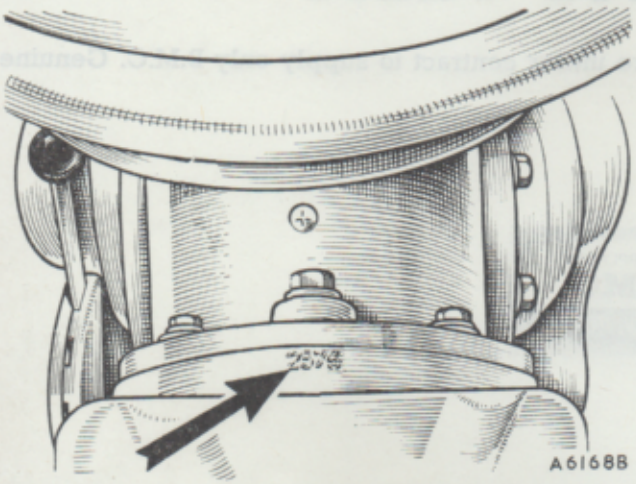

The **Power Take-Off Unit Serial Number** is stamped on the top flange of the unit housing

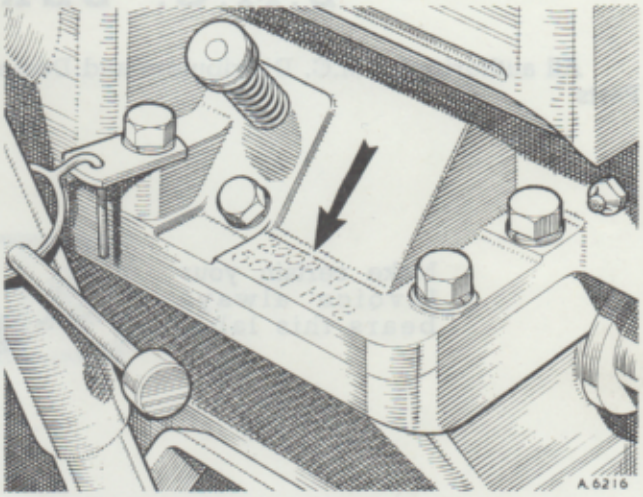

The **Hydraulic Power Unit Serial Number** is stamped on the cross-shaft housing, adjacent to the valve adjusting screw

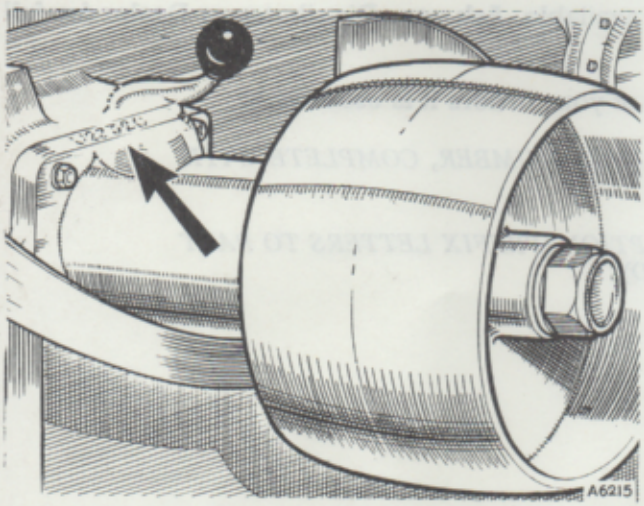

The **Belt Pulley Unit Serial Number** is stamped on the top flange of the unit housing

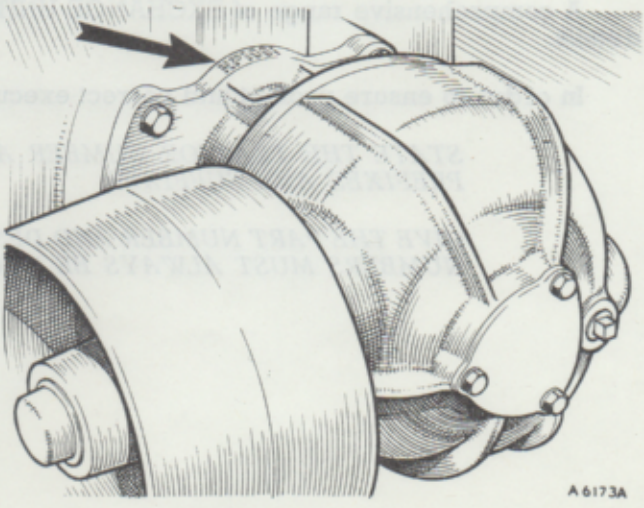

The **Belt Pulley Unit Serial Number** is stamped on the top flange of the unit housing

Serial Number Identification
Models 3DL and 4DM

Models NOT fitted with I.P.T.O.

Model	Tractor numbers sliding-hub-type rear axle	Tractor numbers flanged-hub type rear axle	Gearbox number	Belt pulley number	Hydraulic unit number
3DL (B.M.C. Diesel)	—	771–501 to 10024	4010–501	U–501	2000U001
4DM (B.M.C. Diesel)	DE1001 IDE10388 787–501 to 976 787–4001 to 4500 787–10001 to 13610	 787–977 to 4000 787–4500 to 10000 787–20000 to 23883	U17508 I-34910 4010–501	U501	U17980 to 25216 2000U001

Models fitted with I.P.T.O.

3DL (B.M.C. Diesel)	—	772–501 to 3063	4013–501	U501	2000U001
4DM (B.M.C. Diesel)	IDE10388 792–501 to 760 792–1601 to 2100 792–10000 to 12588	 792–761 to 1600 792–2101 to 5848	INPT–101 4013–501	U501	2000U001

Serial Numbers of Tractors fitted with Differential Lock and Wheel Brakes

The letter 'L' will be used as a suffix for all tractors fitted with differential lock, e.g.,	The letter 'B' will be used as a suffix for all tractors fitted with wheel brakes, e.g.,	The letter 'X' will be used as a suffix for all tractors fitted with differential lock and wheel brakes, e.g.,
787–6335L 771–4817L	787–6489B 771–4681B	787–1234X 771–1234X

†Revised Information. Issue 2

Serial Number Identification—*continued*
Models 342 and 460

TRACTOR No.—Two types of serial Identification plates were employed on models 342 and 460, examples of which are shown below

TYPE A This type of coding was used with the introduction of both 342 and 460 models and was employed on tractors bearing serial numbers 24000 to 40240.

1. Code Prefix No. This is a combination of numerals indicating the model and variation in build, for details of the code see page xiv.

2. Letter 'T' or 'B' This letter divides the code prefix from the serial number and denotes the factory of origin, e.g., 'T'=Tractor and Transmissions Branch, Birmingham. 'B'=Bathgate, Scotland.

3. Serial No. This consists of a series of numbers running consecutively and stamped on all tractors irrespective of model or variation in build.

EXAMPLE TYPE A

14B24000
- 24000 — Serial number
- B — Built at Bathgate, Scotland
- 14 — Basic 460 tractor fitted with flanged axle shafts

TYPE B This type of coding was used on models 342 and 460 and employed on tractors bearing serial numbers 40241 onwards.

1. Model Prefix No. This indicates the model in its available production form, e.g.,
42B=Basic type 342 tractor
42N=342 tractor incorporating I.P.T.O.
Note: After the letter 'B' or 'N' a number preceded by an oblique stroke will be used to indicate any significant design change e.g., 42B/1=introduction of needle roller bearing to the differential. For complete details of the prefix coding see page xv.

2. Special fitments Code This is a combination of numerals indicating the optional extras fitted to the tractor. See page xvi for the coding of the individual options, For the coding for combinations of these individual options, see pages xvii **to** xxv.

3. Serial No. This as on type A consists of a series of numbers running consecutively and stamped on all tractors irrespective of model or variation in build.

EXAMPLE TYPE B

42N/I 505 40241
- 40241 — Serial number
- 505 — Special fitments code
- I — Introduction of needle roller bearing
- 42N — 342 tractor fitted with I.P.T.O.

GEARBOX No.—The serial number of the gearbox is made up in three to five parts.

1. Code Prefix No. This is a combination of numerals indicating the variation in build and is as follows:—4010–Standard gearbox and 4013–gearbox with independent power take-off.

2. Letter 'T' or 'B' This letter divides the code prefix from the serial number and denotes the factory of origin, e.g., 'T'—Tractor and Transmissions Branch, Birmingham. 'B'—Bathgate, Scotland.

3. Serial No. This consists of a series of numbers running consecutively and stamped on all gearboxes irrespective of model or variation in build.

4. Code suffix letter 'N' or 'P' The letter 'N' denotes that the gearbox is fitted with needle-roller-bearing reverse gear and the letter 'P' denotes that the gearbox is fitted with low-ratio final drive.

EXAMPLE

4013 B 27025 NP
- NP — Needle-roller-bearing reverse gear and low ratio final drive
- 27025 — Serial number
- B — Built at Bathgate, Scotland
- 4013 — Fitted with I.P.T.O. unit

Serial Number Identification—*continued*
Models 342 and 460—*continued*

HYDRAULIC UNIT No. (HU)—The serial number is made up in three parts.

1. Code Prefix No. This number indicates the (P.S.I.) pounds-per-square-inch and is stamped on all hydraulic units.

2. Letter 'U' This letter divides the code prefix from the serial numbers and denotes the unit is unified threaded.

3. Serial No. This consists of a series of numbers running consecutively and stamped on all units irrespective of Model.

EXAMPLE

2000 U 50201

Serial number
Unified threads
2000 lb./sq./in unit

BELT PULLEY UNIT No. (BP)—The serial number of the belt pulley is made up in two parts.

1. Letter 'U' This letter denotes the unit is unified threaded.

2. Serial No. This consists of a series of numbers running consecutively and stamped on all units.

EXAMPLE

U 37846

Serial number
Unified threads

COMMENCING SERIAL NUMBERS
Models 342 and 460

Tractor No.	Gearbox No.	Hydraulic Unit No.	Belt Pulley Unit No.
T24000	T27025	U50201:	U37846:

†Revised Information. Issue 2

Serial Number Identification—*continued*
Models 10/42 and 10/60

TRACTOR No.—Following is the type of serial identification plate employed on models 10/42 and 10/60.

1. Model Prefix No. This indicates the model in its available production form, e.g.,
42B = Basic type 10/42 tractor
42N = 10/42 tractor incorporating I.P.T.O.

Note: After the letter 'B' or 'N' a number preceded by an oblique stroke will be used to indicate any significant design change, e.g., 42B/4 = introduction of 10-speed gearbox. For complete details of prefix coding see page xv.

2. Special fitments Code This is a combination of numerals indicating the optional extras fitted to the tractor. See page xvi for the coding of the individual options. For the coding for combinations of these individual options, see pages xvii to xxv.

3. Serial No. This consists of a series of numbers running consecutively and stamped on all tractors irrespective of model or variation in build.

EXAMPLE

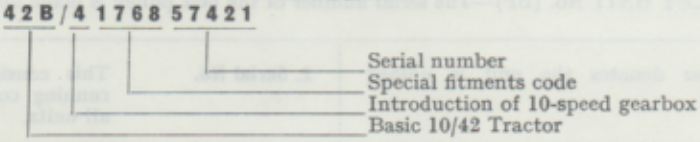

GEARBOX No.—The serial number of the gearbox is made up in two parts.

1. Code Prefix No. This indicates the number of speeds and the variation in build, e.g., 10B = Basic gearbox and 10N = gearbox with independent power take-off.

2. Serial No. This consists of a series of numbers running consecutively and stamped on all gearboxes irrespective of model or variation in build.

EXAMPLE

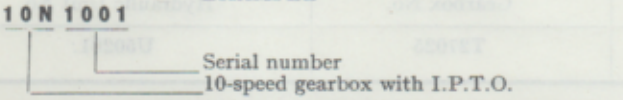

†Revised Information. Issue 2

Serial Number Identification—*continued*
Models 10/42 and 10/60—*continued*

HYDRAULIC UNIT No. The serial number of the hydraulic unit is made up in three parts.

1. Code Prefix No. This number indicates the p.s.i. (pounds per square inch) and is stamped on all hydraulic units.

2. Letters HP2 This divides the code prefix from the serial number and denotes dual-flow hydraulics.

3. Serial No. This consists of a series of numbers running consecutively and stamped on all units irrespective of model.

EXAMPLE

2000U HP2 1001

Serial number
Dual-flow hydraulics
PSI—maximum working pressure

BELT PULLEY UNIT No. The serial number of the belt pulley unit is made up in two parts.

1. Letters RP These letters indicate that the unit is rear-mounted.

2. Serial No. This consists of a series of numbers running consecutively and stamped on all units.

EXAMPLE

RP 1001

Serial number.
Rear mounted belt pulley unit

COMMENCING SERIAL NUMBERS
Models 10/42 and 10/60

Tractor No.	Gearbox No.	Hydraulic Unit No.	Belt Pulley Unit No.
57420	1001	1001	1001

†Revised Information. Issue 2

Special Fitments Code

342 and 460 Type A Identification, Plates only

The following code prefix numbers are included in the tractor data for 342 and 460 models only built to special conditions.

Code Prefix	Description
14	Basic 460 tractor fitted with flanged axle shafts.
24	460 tractor fitted with flanged axle shafts and hydraulic power unit.
34	460 tractor fitted with flanged axle shafts and hydraulic power unit with I.P.T.O.
44	Basic 460 tractor fitted with sliding-hub axle shafts.
54	460 tractor fitted with sliding-hub axle shafts and hydraulic power unit.
64	460 tractor fitted with sliding-hub axle shafts and hydraulic power unit with I.P.T.O.
74	Basic 460 tractor fitted with flanged axle shafts and wheel brakes.
84	460 tractor fitted with flanged axle shafts, hydraulic power unit, and wheel brakes.
94	460 tractor fitted with flanged axle shafts, hydraulic power unit with I.P.T.O., and wheel brakes.
13	Basic 342 tractor.
23	342 tractor with hydraulic power unit.
33	342 tractor with hydraulic power unit and I.P.T.O.
73	Basic 342 tractor with wheel brakes.
83	342 tractor with hydraulic power unit and wheel brakes.
93	342 tractor with hydraulic power unit, I.P.T.O., and wheel brakes.

Design Change Prefix Coding

Models 342, 460, 10/42 and 10/60

The following is a complete list of significant design changes since the introduction of models 342 and 460.

Code Prefix	Description
42B/1 42N/1	Torrington needle-roller bearing for final drive.
42B/2 42N/2	100-mm, 2.8-litre diesel engine.
42B/3 42N/3	10-speed gearbox—Export—less safety guards, etc.
42B/4 42N/4	10-speed gearbox—Home market—complete with safety regulation equipment required by law.
42B/5	5-speed gearbox skidded unit—(Bamford)
42B/6	5-speed gearbox skidded unit with hydraulics—(Bamford)
42B/7	10-speed gearbox skidded unit complete with wheel brakes and road speed control—(Bamford)
42B/8	10-speed gearbox skidded unit complete with wheel brakes, road speed control, P.T.O. and Hydraulic lift—(Bamford)
42B/9	10-speed gearbox skidded unit—(Bamford)
42B/10	10-speed gearbox skidded unit complete with P.T.O. and Hydraulic lift—(Bamford)
42B/11	10-speed gearbox skidded unit—(Export)
60B/1 60N/1	Torrington needle-roller bearing for final drive.
60B/2 60N/2	10-speed gearbox—Export—less safety guards, etc.
60B/3	5-speed gearbox skidded unit—Specification A.
60B/4	5-speed gearbox skidded unit—Specification B.
60B/5 60N/5	10-speed gearbox—Home market—complete with safety regulation equipment required by law in the U.K.
60B/6	5-speed gearbox skidded unit—Specification A—(Cantatore)
60N/6	10-speed gearbox Tractor—(Bray Construction Equipment Ltd.)
60B/7	10-speed gearbox skidded unit—Specification B.
60B/8	10-speed gearbox skidded unit—Specification B (alternative)
60B/9	10-speed gearbox skidded unit—Specification A.
60B/10	10-speed gearbox skidded unit—Specification A (Cantatore)
60B/11	10-speed gearbox skidded unit—Specification A (India)
60B/12	10-speed gearbox skidded unit—Specification A (Alternative) (India)
60B/13	10-speed gearbox skidded unit—(Shawnee-Poole)
60B/14	10-speed gearbox skided unit—(Bamford)
60B/15	10-speed gearbox skidded unit complete with wheel brakes and road speed control—(Bamford)
60B/16	10-speed gearbox skidded unit—(Crystal Palace Show—Cantatore)
60B/17	10-speed gearbox skidded unit—(Star Cranes Ltd.)
60B/18	10-speed gearbox skidded unit—(Export)
60B/20	10-speed gearbox skidded unit—(Bray Construction Equipment Ltd.)
60B/21	10-speed gearbox skidded unit—(Bray Construction Equipment Ltd.)
60B/22	10-speed gearbox skidded unit—(Bray Construction Equipment Ltd.)
60B/23	10-speed gearbox skidded unit—(Bray Construction Equipment Ltd.)
60B/24	10-speed gearbox skidded unit—(Bamford Excavators' Ltd.)
60B/25	10-speed gearbox skidded unit complete with wheel brakes and road speed control—(Bamford Excavators Ltd.)
60B/26	10-speed gearbox skidded unit—(Bamford Excavators Ltd.)
60B/27	10-speed gearbox skidded unit—Steel Fabrications Co. (Shawnee-Pool)

Special Fitments Code

342, 460, Type B and 10/42, 10/60 Identification Plates

(SINGLES)

Code No.	Description
10	P.T.O. and independent hydraulic lift complete with depth control.
11	P.T.O. and independent hydraulic lift complete with depth control, less linkage.
12	Power take-off unit.
13	Belt pulley unit.
14	Reverse gear—needle-roller bearing—342, 460.
15	Hand brake and fittings—342, 460.
16	Seat—de-luxe and seat cushion.
17	Tractometer—m.p.h.
18	Tractometer—k.p.h.
19	Radius arms.
20	Air cleaner extension, additional fuel filter, and fan blade.
21	Front end weight.
22	Front end weight—internal.
23	Rear wheel weight for 10×36 or 12×30 wheels, flanged axle.
24	Drawbar extension.
25	Power-assisted steering.
26	Final drive—low ratio—342, 460.
27	Road speed control.
28	Independent braking system.
29	Vacuum trailer braking equipment—342, 460.
30	Radiator shutters—342.
31	Hub-type axle shafts and fittings (less wheels, tyres, and tubes)—460, 10/60.
32	Belt pulley guard.
33	Lighting and horn—vertical dipping headlamps—Home market—342, 460.
34	Lighting—vertical dipping headlamps—LH rule of road—342, 460.
35	Lighting—vertical dipping headlamps—RH rule of road—342, 460.
36	Lighting—vertical dipping headlamps—FRANCE—342, 460.
37	Lighting—vertical dipping headlamps—NETHERLANDS—342, 460.
38	Lighting—vertical dipping headlamps—SWEDEN 342, 460.
39	Lighting—vertical dipping headlamps—NORWAY—342, 460.
40	Lighting—vertical dipping headlamps—DENMARK—342, 460.
41	Lighting—vertical dipping headlamps—SOUTH AFRICA—342, 460.
42	Rear wheel weights for 10×36 wheels—hub-type axle—460, 10/60.
43	Rear wheel weights for 12×30 wheels—hub-type axle—460, 10/60.
44	13″ Heavy-duty clutch.
45	Lighting—vertical dipping headlamps—FINLAND—342, 460.
46	Canvas cover—342, 460.
47	Offset drawbar.
48	Fan blade and radiator pressure filler cap.
49	
50	
51	
52	Mid-mounted drawbar—460, 10/60.
53	Front and rear number-plates—RH road rule—342, 460.
54	Front and rear number-plates—LH road rule—342, 460.
55	Twin rear wheels—10×36 flanged axle shafts—460, 10/60.
56	Twin rear wheels—10×36 hub-type axle shafts—460, 10/60.
57	Blocked wheels.
58	Twin rear wheels—342, 10/42—10×32.
59	Hydraulic linkage.
60	Twin rear wheels—9×28—342, 10/42.
61	Heavy-duty battery cables—460, 10/60.
62	Front wheel weights for 4·50×16, 5·50×16, and 3·63×19 wheels.
63	Rear wheel weights for 10×32 wheels—342, 10/42.
64	'V' Twin front wheels and axle—460.
65	Heavy-duty starter.
66	13″ Heavy-duty clutch and C.A.V. Starter—460, 10/60.
67	Hydraulic valve levers and instruction plates.
68	Depth control hand lever and instruction transfers.
69	Power steering guards.
70	Headlamps—Home and Export—10/42, 10/60.
71	Headlamps—NETHERLANDS—10/42, 10/60.
72	Headlamps—FRANCE—10/42, 10/60.
73	Electric lighting equipment (less headlamps)—10/42, 10/60.
74	Hub-type axle shafts and fittings—10/60.
†75	P.T.O. and Independent hydraulic lift complete with depth control (2,500 psi)
†76	P.T.O. and Independent hydraulic lift complete with depth control—less linkage (2,500 psi)
†77	Hydraulic linkage (2,500 psi)
†78	Electric lighting Equipment less headlamps (South Africa)
†79	
†80	
†81	
†82	
†83	
†84	
†85	
†86	Drivers seat—De-luxe.
†87	
†88	
†89	
†90	
†91	
†92	
†93	
†94	Floor plates (Skidded Unit-Export Models)
†95	Mudguards (Skidded Unit—Export Models)
†96	Bonnet and radiator case (Skidded Unit—Export Models)
†97	Steering assembly, wheel and drag link—(Skidded Unit—Export Models)
†98	Fuel tank and pipes—(Skidded Unit—Export Models)
†99	Instrument panel, Instruments and side panels (KPH) (Skidded Unit—Export Models)
†100	Instrument panel. Instruments and side panels (MPH) (Skidded Unit—Export Models)
†101	Toolbox and tools (Skidded Unit—Export Models)
†102	Battery tray (Skidded Unit—Export Models)

Special Fitments Code—*continued*

(GROUPS)

The following is a combination of single code numbers and is the code number which appears on 342, 460, Type B and 10/42, 10/60 identification plates.

Code No.	Code Number Singles
500	10, 15, 16, 17, 33
501	10, 15, 16, 21, 33
502	10, 15, 16, 17, 22, 33
503	10, 15, 16, 17, 21, 22, 33
504	15
505	10, 14, 15, 16, 17, 33
506	10, 14, 15, 16, 17, 21, 33
507	10, 14, 15, 16, 17, 22, 33
508	10, 14, 15, 16, 17, 21, 22, 33
509	14, 15
510	10, 13, 15, 16, 17, 33
511	10, 13, 15, 16, 17, 21, 33
512	10, 13, 15, 16, 17, 22, 33
513	10, 13, 15, 16, 17, 21, 22, 33
514	13, 15
515	10, 13, 14, 15, 16, 17, 33
516	10, 13, 14, 15, 16, 17, 21, 33
517	10, 13, 14, 15, 16, 17, 22, 33
518	10, 13, 14, 15, 16, 17, 21, 22, 33
519	13, 14, 15
520	10, 15, 16, 17, 19, 33
521	10, 15, 16, 17, 19, 21 , 33
522	10, 15, 16, 17, 19, 22, 33
523	10, 15, 16, 17, 19, 21, 22, 33
524	15, 19
525	10, 14, 15, 16, 17, 19, 33
526	10, 14, 15, 16, 17, 19, 21, 33
527	10, 14, 15, 16, 17, 19, 22, 33
528	10, 14, 15, 16, 17, 19, 21, 22, 33
529	14, 15, 19
530	10, 13, 15, 16, 17, 19, 33
531	10, 13, 15, 16, 17, 19, 21, 33
532	10, 13, 15, 16, 17, 19, 22, 33
533	10, 13, 15, 16, 17, 19, 21, 22, 33
534	13, 15, 19
535	10, 13, 14, 15, 16, 17, 19, 33
536	10, 13, 14, 15, 16, 17, 19, 21, 33
537	10, 13, 14, 15, 16, 17, 19, 22, 33
538	10, 13, 14, 15, 16, 17, 19, 21, 22, 33
539	13, 14, 15, 19
540	10, 15, 16, 17, 24, 33
541	10, 15, 16, 17, 21, 24, 33
542	10, 15, 16, 17, 22, 24, 33
543	10, 15, 16, 17, 21, 22, 24, 33
544	15, 24
545	10, 15, 14, 16, 17, 24, 33
546	10, 14, 15, 16, 17, 21, 24, 33
547	10, 14, 15, 16, 17, 22, 24, 33
548	10, 14, 15, 16, 17, 21, 22, 24, 33
549	14, 15, 24
550	10, 13, 15, 16, 17, 24, 33
551	10, 13, 15, 16, 17, 21, 24, 33
552	10, 13, 15, 16, 17, 22, 24, 33
553	10, 13, 15, 16, 17, 21, 22, 24, 33
554	13, 15, 24
555	10, 13, 14, 15, 16, 17, 24, 33
556	10, 13, 14, 15, 16, 17, 21, 24, 33
557	10, 13, 14, 15, 16, 17, 22, 24, 33
558	10, 13, 14, 15, 16, 17, 21, 22, 24, 33
559	13, 14, 15, 24
560	10, 15, 16, 17, 19, 24, 33
561	10, 15, 16, 17, 19, 21, 24, 33
562	10, 15, 16, 17, 19, 22, 24, 33
563	10, 15, 16, 17, 19, 21, 22, 24, 33
564	15, 19, 24
565	10, 14, 15, 16, 17, 19, 24, 33
566	10, 14, 15, 16, 17, 19, 21, 24, 33
567	10, 14, 15, 16, 17, 19, 22, 24, 33
568	10, 14, 15, 16, 17, 19, 21, 22, 24, 33
569	14, 15, 19, 24
570	10, 13, 15, 16, 17, 19, 24, 33
571	10, 13, 15, 16, 17, 19, 21, 24, 33
572	10, 13, 15, 16, 17, 19, 22, 24, 33
573	10, 13, 15, 16, 17, 19, 21, 22, 24, 33
574	13, 15, 19, 24
575	10, 13, 14, 15, 16, 17, 19, 24, 33
576	10, 13, 14, 15, 16, 17, 19, 21, 24, 33
577	10, 13, 14, 15, 16, 17, 19, 22, 24, 33
578	10, 13, 14, 15, 16, 17, 19, 21, 22, 24, 33
579	13, 14, 15, 19, 24
580	10, 15, 16, 17, 20, 33
581	10, 15, 16, 17, 20, 21, 33
582	10, 15, 16, 17, 20, 22, 33
583	10, 15, 16, 17, 20, 21, 22, 33
584	15, 20
585	10, 14, 15, 16, 17, 20, 33
586	10, 14, 15, 16, 17, 20, 21, 33
587	10, 14, 15, 16, 17, 20, 22, 33
588	10, 14, 15, 16, 17, 20, 21, 22, 33
589	14, 15, 20
590	10, 13, 15, 16, 17, 20, 33
591	10, 13, 15, 16, 17, 20, 21, 33
592	10, 13, 15, 16, 17, 20, 22, 33
593	10, 13, 15, 16, 17, 20, 21, 22, 33
594	15, 13, 20
595	10, 13, 14, 15, 16, 17, 20, 33
596	10, 13, 14, 15, 16, 17, 20, 21, 33
597	10, 13, 14, 15, 16, 17, 20, 22, 33
598	10, 13, 14, 15, 16, 17, 20, 21, 22, 33
599	13, 14, 15, 20
600	10, 15, 16, 17, 19, 20, 33
601	10, 15, 16, 17, 19, 20, 21, 33
602	10, 15, 16, 17, 19, 20, 22, 33
603	10, 15, 16, 17, 19, 20, 21, 22, 33
604	15, 19, 20
605	10, 14, 15, 16, 17, 19, 20, 33
606	10, 14, 15, 16, 17, 19, 20, 21, 33
607	10, 14, 15, 16, 17, 19, 20, 22, 33
608	10, 14, 15, 16, 17, 19, 20, 21, 22, 33
609	14, 15, 19, 20
610	10, 13, 15, 16, 17, 19, 20, 33
611	10, 13, 15, 16, 17, 19, 20, 21, 33
612	10, 13, 15, 16, 17, 19, 20, 22, 33
613	10, 13, 15, 16, 17, 19, 20, 21, 22, 33
614	13, 15, 19, 20
615	10, 13, 14, 15, 16, 17, 19, 20, 33
616	10, 13, 14, 15, 16, 17, 19, 20, 21, 33
617	10, 13, 14, 15, 16, 17, 19, 20, 22, 33
618	10, 13, 14, 15, 16, 17, 19, 20, 21, 22, 33
619	13, 14, 15, 19, 20
620	10, 15, 16, 17, 20, 24, 33
621	10, 15, 16, 17, 20, 21, 24, 33
622	10, 15, 16, 17, 20, 22, 24, 33
623	10, 15, 16, 17, 20, 21, 22, 24, 33
624	15, 20, 24
625	10, 14, 15, 16, 17, 20, 24, 33
626	10, 14, 15, 16, 17, 20, 21, 24, 33
627	10, 14, 15, 16, 17, 20, 22, 24, 33
628	10, 14, 15, 16, 17, 20, 21, 22, 24, 33
629	14, 15, 20, 24
630	10, 13, 15, 16, 17, 20, 24, 33
631	10, 13, 15, 16, 17, 20, 21, 24, 33
632	10, 13, 15, 16, 17, 20, 22, 24, 33
633	10, 13, 15, 16, 17, 20, 21, 22, 24, 33
634	13, 15, 20, 24
635	10, 13, 14, 15, 16, 17, 20, 24, 33
636	10, 13, 14, 15, 16, 17, 20, 21, 24, 33
637	10, 13, 14, 15, 16, 17, 20, 22, 24, 33
638	10, 13, 14, 15, 16, 17, 20, 21, 22, 24, 33
639	13, 14, 15, 20, 24
640	10, 15, 16, 17, 19, 20, 24, 33
641	10, 15, 16, 17, 19, 20, 21, 24, 33
642	10, 15, 16, 17, 19, 20, 22, 24, 33
643	10, 15, 16, 17, 19, 20, 21, 22, 24, 33
644	15, 19, 20, 24
645	10, 14, 15, 16, 17, 19, 20, 24, 33

†Revised Information. Issue 2

Special Fitments Code—*continued*

Code No.	Code Number Singles
646	10, 14, 15, 16, 17, 19, 20, 21, 24, 33
647	10, 14, 15, 16, 17, 19, 20, 22, 24, 33
648	10, 14, 15, 16, 17, 19, 20, 21, 22, 24, 33
649	14, 15, 19, 20, 24
650	10, 13, 15, 16, 17, 19, 20, 24, 33
651	10, 13, 15, 16, 17, 19, 20, 21, 24, 33
652	10, 13, 15, 16, 17, 19, 20, 22, 24, 33
653	10, 13, 15, 16, 17, 19, 20, 21, 22, 24, 33
654	13, 15, 19, 20, 24
655	10, 13, 14, 15, 16, 17, 19, 20, 24, 33
656	10, 13, 14, 15, 16, 17, 19, 20, 21, 24, 33
657	10, 13, 14, 15, 16, 17, 19, 20, 22, 24, 33
658	10, 13, 14, 15, 16, 17, 19, 20, 21, 22, 24, 33
659	13, 14, 15, 19, 20, 24
660	10, 15, 16, 17, 26, 33
661	10, 15, 16, 17, 21, 26, 33
662	10, 15, 16, 17, 22, 26, 33
663	10, 15, 16, 17, 21, 22, 26, 33
664	15, 26
665	10, 14, 15, 16, 17, 26, 33
666	10, 14, 15, 16, 17, 21, 26, 33
667	10, 14, 15, 16, 17, 22, 26, 33
668	10, 14, 15, 16, 17, 21, 22, 26, 33
669	14, 15, 26
670	10, 13, 15, 16, 17, 26, 33
671	10, 13, 15, 16, 17, 21, 26, 33
672	10, 13, 15, 16, 17, 22, 26, 33
673	10, 13, 15, 16, 17, 21, 22, 26, 33
674	13, 15, 26
675	10, 13, 14, 15, 16, 17, 26, 33
676	10, 13, 14, 15, 16, 17, 21, 26, 33
677	10, 13, 14, 15, 16, 17, 22, 26, 33
678	10, 13, 14, 15, 16, 17, 21, 22, 26, 33
679	13, 14, 15, 26
680	10, 15, 16, 17, 19, 26, 33
681	10, 15, 16, 17, 19, 21, 26, 33
682	10, 15, 16, 17, 19, 22, 26, 33
683	10, 15, 16, 17, 19, 21, 22, 26, 33
684	15, 19, 26
685	10, 14, 15, 16, 17, 19, 26, 33
686	10, 14, 15, 16, 17, 19, 21, 26, 33
687	10, 14, 15, 16, 17, 19, 22, 26, 33
688	10, 14, 15, 16, 17, 19, 21, 22, 26, 33
689	14, 15, 19, 26
690	10, 13, 15, 16, 17, 19, 26, 33
691	10, 13, 15, 16, 17, 19, 21, 26, 33
692	10, 13, 15, 16, 17, 19, 22, 26, 33
693	10, 13, 15, 16, 17, 19, 21, 22, 26, 33
694	13, 14, 19, 26
695	10, 13, 14, 15, 16, 17, 19, 26, 33
696	10, 13, 14, 15, 16, 17, 19, 21, 26, 33
697	10, 13, 14, 15, 16, 17, 19, 22, 26, 33
698	10, 13, 14, 15, 16, 17, 19, 21, 22, 26, 33
699	13, 14, 15, 19, 26
700	10, 15, 16, 17, 24, 26, 33
701	10, 15, 16, 17, 21, 24, 26, 33
702	10, 15, 16, 17, 22, 24, 26, 33
703	10, 15, 16, 17, 21, 22, 24, 26, 33
704	15, 24, 26
705	10, 14, 15, 16, 17, 24, 26, 33
706	10, 14, 15, 16, 17, 21, 24, 26, 33
707	10, 14, 15, 16, 17, 22, 24, 26, 33
708	10, 14, 15, 16, 17, 21, 22, 24, 26, 33
709	14, 15, 24, 26
710	10, 13, 15, 16, 17, 24, 26, 33
711	10, 13, 15, 16, 17, 21, 24, 26, 33
712	10, 13, 15, 16, 17, 22, 24, 26, 33
713	10, 13, 15, 16, 17, 21, 22, 24, 26, 33
714	13, 15, 24, 26
715	10, 13, 14, 15, 16, 17, 24, 26, 33
716	10, 13, 14, 15, 16, 17, 21, 24, 26, 33
717	10, 13, 14, 15, 16, 17, 22, 24, 26, 33
718	10, 13, 14, 15, 16, 17, 21, 22, 24, 26, 33
719	13, 14, 15, 24, 26
720	10, 15, 16, 17, 19, 24, 26, 33
721	10, 15, 16, 17, 19, 21, 24, 26, 33
722	10, 15, 16, 17, 19, 22, 24, 26, 33
723	10, 15, 16, 17, 19, 21, 22, 24, 26, 33
724	15, 19, 24, 26
725	10, 14, 15, 16, 17, 19, 24, 26, 33

Code No.	Code Number Singles
726	10, 14, 15, 16, 17, 19, 21, 24, 26, 33
727	10, 14, 15, 16, 17, 19, 22, 24, 26, 33
728	10, 14, 15, 16, 17, 19, 21, 22, 24, 26, 33
729	14, 15, 19, 24, 26
730	10, 13, 15, 16, 17, 19, 24, 26, 33
731	10, 13, 15, 16, 17, 19, 21, 24, 26, 33
732	10, 13, 15, 16, 17, 19, 22, 24, 26, 33
733	10, 13, 15, 16, 17, 19, 21, 22, 24, 26, 33
734	13, 15, 19, 24, 26
735	10, 13, 14, 15, 16, 17, 19, 24, 26, 33
736	10, 13, 14, 15, 16, 17, 19, 21, 24, 26, 33
737	10, 13, 14, 15, 16, 17, 19, 22, 24, 26, 33
738	10, 13, 14, 16, 17, 19, 21, 22, 24, 26, 33
739	13, 14, 15, 19, 24, 26
740	10, 15, 16, 17, 20, 26, 33
741	10, 15, 16, 17, 20, 21, 26, 33
742	10, 15, 16, 17, 20, 22, 26, 33
743	10, 15, 16, 17, 20, 21, 22, 26, 33
744	15, 20, 26
745	10, 14, 15, 16, 17, 20, 26, 33
746	10, 14, 15, 16, 17, 20, 21, 26, 33
747	10, 14, 15, 16, 17, 20, 22, 26, 33
748	10, 14, 15, 16, 17, 20, 21, 22, 26, 33
749	14, 15, 20, 26
750	10, 13, 15, 16, 17, 20, 26, 33
751	10, 13, 15, 16, 17, 20, 21, 26, 33
752	10, 13, 15, 16, 17, 20, 22, 26, 33
753	10, 13, 15, 16, 17, 20, 21, 22, 26, 33
754	13, 15, 20, 26
755	10, 13, 14, 15, 16, 17, 20, 26, 33
756	10, 13, 14, 15, 16, 17, 20, 21, 26, 33
757	10, 13, 14, 15, 16, 17, 20, 22, 26, 33
758	10, 13, 14, 15, 16, 17, 20, 21, 22, 26, 33
759	13, 14, 15, 20, 26
760	10, 15, 16, 17, 19, 20, 26, 33
761	10, 15, 16, 17, 19, 20, 21, 26, 33
762	10, 15, 16, 17, 19, 20, 22, 26, 33
763	10, 15, 16, 17, 19, 20, 21, 22, 26, 33
764	15, 19, 20, 26
765	10, 14, 15, 16, 17, 19, 20, 26, 33
766	10, 14, 15, 16, 17, 19, 20, 21, 26, 33
767	10, 14, 15, 16, 17, 19, 20, 22, 26, 33
768	10, 14, 15, 16, 17, 19, 20, 21, 22, 26, 33
769	14, 15, 19, 20, 26
770	10, 13, 15, 16, 17, 19, 20, 26, 33
771	10, 13, 15, 16, 17, 19, 20, 21, 26, 33
772	10, 13, 15, 16, 17, 19, 20, 22, 26, 33
773	10, 13, 15, 16, 17, 19, 20, 21, 22, 26, 33
774	13, 15, 19, 20, 26
775	10, 13, 14, 15, 16, 17, 19, 20, 26, 33
776	10, 13, 14, 15, 16, 17, 19, 20, 21, 26, 33
777	10, 13, 14, 15, 16, 17, 19, 20, 22, 26, 33
778	10, 13, 14, 15, 16, 17, 19, 20, 21, 22, 26, 33
779	13, 14, 15, 19, 20, 26
780	10, 15, 16, 17, 20, 24, 26, 33
781	10, 15, 16, 17, 20, 21, 24, 26, 33
782	10, 15, 16, 17, 20, 22, 24, 26, 33
783	10, 15, 16, 17, 20, 21, 22, 24, 26, 33
784	15, 20, 24, 26
785	10, 14, 15, 16, 17, 20, 24, 26, 33
786	10, 14, 15, 16, 17, 20, 21, 24, 26, 33
787	10, 14, 15, 16, 17, 20, 22, 24, 26, 33
788	10, 14, 15, 16, 17, 20, 21, 22, 24, 26, 33
789	14, 15, 20, 24, 26
790	10, 13, 15, 16, 17, 20, 24, 26, 33
791	10, 13, 15, 16, 17, 20, 21, 24, 26, 33
792	10, 13, 15, 16, 17, 20, 22, 24, 26, 33
793	10, 13, 15, 16, 17, 20, 21, 22, 24, 26, 33
794	13, 15, 20, 24, 26
795	10, 13, 14, 15, 16, 17, 20, 24, 26, 33
796	10, 13, 14, 15, 16, 17, 20, 21, 24, 26, 33
797	10, 13, 14, 15, 16, 17, 20, 22, 24, 26, 33
798	10, 13, 14, 15, 16, 17, 20, 21, 22, 24, 26, 33
799	13, 14, 15, 20, 24, 26
800	10, 15, 16, 17, 19, 20, 24, 26, 33
801	10, 15, 16, 17, 19, 20, 21, 24, 26, 33
802	10, 15, 16, 17, 19, 20, 22, 24, 26, 33
803	10, 15, 16, 17, 19, 20, 21, 22, 24, 26, 33
804	15, 19, 20, 24, 26
805	10, 14, 15, 16, 19, 20, 24, 26, 33

†Revised Information. Issue 2

Special Fitments Code—*continued*

Code No.	Code Number Singles
806	10, 14, 15, 16, 19, 20, 21, 24, 26, 33
807	10, 14, 15, 16, 19, 20, 22, 24, 26, 33
808	10, 14, 15, 16, 19, 20, 21, 22, 24, 26, 33
809	14, 15, 19, 20, 24, 26
810	10, 13, 15, 16, 17, 19, 20, 24, 26, 33
811	10, 13, 15, 16, 17, 19, 20, 21, 24, 26, 33
812	10, 13, 15, 16, 17, 19, 20, 22, 24, 26, 33
813	10, 13, 15, 16, 17, 19, 20, 21, 22, 24, 26, 33
814	13, 15, 19, 20, 24, 26,
815	10, 13, 14, 15, 16, 17, 19, 20, 24, 26, 33
816	10, 13, 14, 15, 16, 17, 19, 20, 21, 24, 26, 33
817	10, 13, 14, 15, 16, 17, 19, 20, 22, 24, 26, 33
818	10, 13, 14, 15, 16, 17, 19, 20, 21, 22, 24, 26, 33
819	13, 14, 15, 19, 20, 24, 26
820	10, 15, 16, 17, 23, 33
821	10, 15, 16, 17, 21, 23, 33
822	10, 15, 16, 17, 22, 23, 33
823	10, 15, 16, 17, 21, 22, 23, 33
824	15, 23
825	10, 14, 15, 16, 17, 23, 33
826	10, 14, 15, 16, 17, 21, 23, 33
827	10, 14, 15, 16, 17, 22, 23, 33
828	10, 14, 15, 16, 17, 21, 22, 23, 33
829	14, 15, 23
830	10, 13, 15, 16, 17, 23, 33
831	10, 13, 15, 16, 17, 21, 23, 33
832	10, 13, 15, 16, 17, 22, 23, 33
833	10, 13, 15, 16, 17, 21, 22, 23, 33
834	13, 15, 23
835	10, 13, 14, 15, 16, 17, 23, 33
836	10, 13, 14, 15, 16, 17, 21, 23, 33
837	10, 13, 14, 15, 16, 17, 22, 23, 33
838	10, 13, 14, 15, 16, 17, 21, 22, 23, 33
839	13, 14, 15, 23
840	10, 15, 16, 17, 19, 23, 33
841	10, 15, 16, 17, 19, 21, 23, 33
842	10, 15, 16, 17, 19, 22, 23, 33
843	10, 15, 16, 17, 19, 21, 22, 23, 33
844	15, 19, 23
845	10, 14, 15, 16, 17, 19, 23, 33
846	10, 14, 15, 16, 17, 19, 21, 23, 33
847	10, 14, 15, 16, 17, 19, 22, 23, 33
848	10, 14, 15, 16, 17, 19, 21, 22, 23, 33
849	14, 15, 19, 23
850	10, 13, 15, 16, 17, 19, 23, 33
851	10, 13, 15, 16, 17, 19, 21, 23, 33
852	10, 13, 15, 16, 17, 19, 22, 23, 33
853	10, 13, 15, 16, 17, 19, 21, 22, 23, 33
854	13, 15, 19, 23
855	10, 13, 14, 15, 16, 17, 19, 23, 33
856	10, 13, 14, 15, 16, 17, 19, 21, 23, 33
857	10, 13, 14, 15, 16, 17, 19, 22, 23, 33
858	10, 13, 14, 15, 16, 17, 19, 21, 22, 23, 33
859	13, 14, 15, 19, 23
860	10, 15, 16, 17, 23, 24, 33
861	10, 15, 16, 17, 21, 23, 24, 33
862	10, 15, 16, 17, 22, 23, 24, 33
863	10, 15, 16, 17, 21, 22, 23, 24, 33
864	15, 23, 24
865	10, 14, 15, 16, 17, 23, 24, 33
866	10, 14, 15, 16, 17, 21, 23, 24, 33
867	10, 14, 15, 16, 17, 22, 23, 24, 33
868	10, 14, 15, 16, 17, 21, 22, 23, 24, 33
869	14, 15, 23, 24
870	10, 13, 15, 16, 17, 23, 24, 33
871	10, 13, 15, 16, 17, 21, 23, 24, 33
872	10, 13, 15, 16, 17, 22, 23, 24, 33
873	10, 13, 15, 16, 17, 21, 22, 23, 24, 33
874	13, 15, 23, 24
875	10, 13, 14, 15, 16, 17, 23, 24, 33
876	10, 13, 14, 15, 16, 17, 21, 23, 24, 33
877	10, 13, 14, 15, 16, 17, 22, 23, 24, 33
878	10, 13, 14, 15, 16, 17, 21, 22, 23, 24, 33
879	13, 14, 15, 23, 24
880	10, 15, 16, 17, 19, 23, 24, 33
881	10, 15, 16, 17, 19, 21, 23, 24, 33
882	10, 15, 16, 17, 19, 22, 23, 24, 33
883	10, 15, 16, 17, 19, 21, 22, 23, 24, 33
884	15, 19, 23, 24
885	10, 14, 15, 16, 17, 19, 23, 24, 33

Code No.	Code Number Singles
886	10, 14, 15, 16, 17, 19, 21, 23, 24, 33
887	10, 14, 15, 16, 17, 19, 22, 23, 24, 33
888	10, 14, 15, 16, 17, 19, 21, 22, 23, 24, 33
889	14, 15, 19, 23, 24
890	10, 13, 15, 16, 17, 19, 23, 24, 33
891	10, 13, 15, 16, 17, 19, 21, 23, 24, 33
892	10, 13, 15, 16, 17, 19, 22, 23, 24, 33
893	10, 13, 15, 16, 17, 19, 21, 22, 23, 24, 33
894	13, 15, 19, 23, 24
895	10, 13, 14, 15, 16, 17, 19, 23, 24, 33
896	10, 13, 14, 15, 16, 17, 19, 21, 23, 24, 33
897	10, 13, 14, 15, 16, 17, 19, 22, 23, 24, 33
898	10, 13, 14, 15, 16, 17, 19, 21, 22, 23, 24, 33
899	13, 14, 15, 19, 23, 24
900	10, 15, 16, 17, 20, 23, 33
901	10, 15, 16, 17, 20, 21, 23, 33
902	10, 15, 16, 17, 20, 22, 23, 33
903	10, 15, 16, 17, 20, 21, 22, 23, 33
904	15, 20, 23
905	10, 14, 15, 16, 17, 20, 23, 33
906	10, 14, 15, 16, 17, 20, 21, 23, 33
907	10, 14, 15, 16, 17, 20, 22, 23, 33
908	10, 14, 15, 16, 17, 20, 21, 22, 23, 33
909	14, 15, 20, 23
910	10, 13, 15, 16, 17, 20, 23, 33
911	10, 13, 15, 16, 17, 20, 21, 23, 33
912	10, 13, 15, 16, 17, 20, 22, 23, 33
913	10, 13, 15, 16, 17, 20, 21, 22, 23, 33
914	13, 15, 20, 23
915	10, 13, 14, 15, 16, 17, 20, 23, 33
916	10, 13, 14, 15, 16, 17, 20, 21, 23, 33
917	10, 13, 14, 15, 16, 17, 20, 22, 23, 33
918	10, 13, 14, 15, 16, 17, 20, 21, 22, 23, 33
919	13, 14, 15, 20, 23
920	10, 15, 16, 17, 19, 20, 23, 33
921	10, 15, 16, 17, 19, 20, 21, 23, 33
922	10, 15, 16, 17, 19, 20, 22, 23, 33
923	10, 15, 16, 17, 19, 20, 21, 22, 23, 33
924	15, 19, 20, 23
925	10, 14, 15, 16, 17, 19, 20, 23, 33
926	10, 14, 15, 16, 17, 19, 20, 21, 23, 33
927	10, 14, 15, 16, 17, 19, 20, 22, 23, 33
928	10, 14, 15, 16, 17, 19, 20, 21, 22, 23, 33
929	14, 15, 19, 20, 23
930	10, 13, 15, 16, 17, 19, 20, 23, 33
931	10, 13, 15, 16, 17, 19, 20, 21, 23, 33
932	10, 13, 15, 16, 17, 19, 20, 22, 23, 33
933	10, 13, 15, 16, 17, 19, 20, 21, 22, 23, 33
934	13, 15, 19, 20, 23
935	10, 13, 14, 15, 16, 17, 19, 20, 23, 33
936	10, 13, 14, 15, 16, 17, 19, 20, 21, 23, 33
937	10, 13, 14, 15, 16, 17, 19, 20, 22, 23, 33
938	10, 13, 14, 15, 16, 17, 19, 20, 21, 22, 23, 33
939	13, 14, 15, 19, 20, 23
940	10, 15, 16, 17, 20, 23, 24, 33
941	10, 15, 16, 17, 20, 21, 23, 24, 33
942	10, 15, 16, 17, 20, 22, 23, 24, 33
943	10, 15, 16, 17, 20, 21, 22, 23, 24, 33
944	15, 20, 23, 24
945	10, 14, 15, 16, 17, 20, 23, 24, 33
946	10, 14, 15, 16, 17, 20, 21, 23, 24, 33
947	10, 14, 15, 16, 17, 20, 22, 23, 24, 33
948	10, 14, 15, 16, 17, 20, 21, 22, 23, 24, 33
949	14, 15, 20, 23, 24
950	10, 13, 15, 16, 17, 20, 23, 24, 33
951	10, 13, 15, 16, 17, 20, 21, 23, 24, 33
952	10, 13, 15, 16, 17, 20, 22, 23, 24, 33
953	10, 13, 15, 16, 17, 20, 21, 22, 23, 24, 33
954	13, 15, 20, 23, 24
955	10, 13, 14, 15, 16, 17, 20, 23, 24, 33
956	10, 13, 14, 15, 16, 17, 20, 21, 23, 24, 33
957	10, 13, 14, 15, 16, 17, 20, 22, 23, 24, 33
958	10, 13, 14, 15, 16, 17, 20, 21, 22, 23, 24, 33
959	13, 14, 15, 20, 23, 24
960	10, 15, 16, 17, 19, 20, 23, 24, 33
961	10, 15, 16, 17, 19, 20, 21, 23, 24, 33
962	10, 15, 16, 17, 19, 20, 22, 23, 24, 33
963	10, 15, 16, 17, 19, 20, 21, 22, 23, 24, 33
964	15, 19, 20, 23, 24
965	10, 14, 15, 16, 17, 19, 20, 23, 24, 33

†Revised Information. Issue 2

Special Fitments Code—*continued*

Code No.	Code Number Singles
966	10, 14, 15, 16, 17, 19, 20, 21, 23, 24, 33
967	10, 14, 15, 16, 17, 19, 20, 22, 23, 24, 33
968	10, 14, 15, 16, 17, 19, 20, 21, 22, 23, 24, 33
969	14, 15, 19, 20, 23, 24
970	10, 13, 15, 16, 17, 19, 20, 23, 24, 33
971	10, 13, 15, 16, 17, 19, 20, 21, 23, 24, 33
972	10, 13, 15, 16, 17, 19, 20, 22, 23, 24, 33
973	10, 13, 15, 16, 17, 19, 20, 21, 22, 23, 24, 33
974	13, 15, 19, 20, 23, 24
975	10, 13, 14, 15, 16, 17, 19, 20, 23, 24, 33
976	10, 13, 15, 16, 17, 19, 20, 21, 23, 24, 33
977	10, 13, 14, 15, 16, 17, 19, 20, 22, 23, 24, 33
978	10, 13, 14, 15, 16, 17, 19, 20, 21, 22, 23, 24, 33
979	13, 14, 15, 19, 20, 23, 24
980	10, 13, 15, 16, 18, 45
981	10, 13, 14, 15, 16, 18, 19, 20, 45
982	10, 14, 16, 18, 19, 20, 30, 39
983	10, 14, 16, 17, 19, 20, 21, 22, 24, 31, 34, 57
984	10, 14, 16, 17, 19, 20, 21, 22, 24, 31, 35, 57
985	10, 13, 14, 15, 16, 17, 19, 20, 24, 31, 34, 52
986	10, 14, 15, 16, 18, 19, 20, 21, 31, 36, 42, 57
987	10, 14, 15, 16, 18, 19, 20, 31, 36, 57
988	10, 14, 16, 18, 19, 20, 30, 40
989	10, 14, 15, 16, 18, 19, 20, 21, 31, 35, 43
990	10, 13, 14, 18, 19, 20, 21, 35
991	10, 14, 16, 17, 19, 20, 24, 31, 35, 57
992	10, 14, 16, 17, 19, 20, 21, 24, 25, 31, 35, 43, 57
993	10, 14, 15, 16, 17, 19, 20, 33
994	10, 14, 16, 18, 19, 20, 39
995	12, 13, 15, 32, 33
996	10, 14, 19, 20, 24, 30, 38
997	10, 13, 14, 15, 16, 17, 19, 20, 21, 22, 23, 24, 27, 30, 33
998	10, 13, 14, 16, 18, 19, 20, 30, 34, 48
999	10, 13, 14, 19, 20, 30
1000	10, 14, 18, 19, 20, 24, 30 38
1001	10, 13, 14, 16, 17, 19, 20, 21, 23, 30, 41
1002	10, 13, 14, 15, 16, 17, 19, 20, 30, 41
1003	10, 14, 15, 19, 20, 30, 33
1004	10, 14, 18, 19, 20, 27, 30
1005	10, 14, 19, 20, 21, 24, 30, 38
1006	10, 13, 14, 16, 18, 19, 20, 30, 45
1007	15, 16, 17, 33
1008	10, 13, 14, 15, 16, 17, 19, 20, 22, 24, 31, 34, 43, 52
1009	10, 15, 16, 17, 31, 33
1010	10, 15, 16, 17, 22, 30, 33
1011	10, 15, 16, 17, 25, 33
1012	10, 13, 15, 16, 17, 19, 33
1013	10, 15, 16, 17, 31, 33
1014	10, 13, 15, 16, 17, 32, 33
1015	10, 14, 15, 16, 17, 33, 60
1016	10, 13, 15, 16, 17, 19, 32, 33
1017	10, 13, 14, 15, 16, 17, 19, 20, 22, 30, 32
1018	10, 13, 14, 15, 16, 17, 19, 20, 22, 30, 32, 33
1019	10, 13, 14, 15, 16, 17, 19, 20, 24, 31, 33, 52
1020	10, 13, 14, 15, 16, 17, 19, 20, 21, 24, 31, 33, 52
1021	10, 13, 14, 15, 16, 17, 19, 20, 22, 23, 24, 31, 33, 52
1022	10, 13, 14, 15, 16, 17, 19, 20, 22, 23, 24, 31, 33
1023	10, 14, 15, 16, 17, 19, 20, 22, 24, 31, 33
1024	10, 13, 14, 15, 16, 17, 19, 20, 21, 23, 24, 31, 33, 52
1025	10, 13, 14, 15, 16, 17, 19, 20, 21, 22, 24, 31, 33, 43, 52
1026	10, 14, 15, 16, 18, 19, 20, 45
1027	10, 14, 15, 16, 17, 19, 20, 22, 24, 25, 31, 34, 52
1028	12, 13, 14, 15, 16, 17, 19, 20, 21, 24, 31, 34, 52
1029	10, 14, 15, 16, 18, 19, 20, 22, 24, 25, 38
1030	10, 13, 14, 15, 16, 17, 19, 20, 31, 41
1031	10, 13, 14, 15, 16, 17, 19, 20, 21, 22, 24, 27, 31, 34, 42
1032	10, 13, 14, 15, 16, 18, 19, 20, 21, 31, 43
1033	10, 14, 15, 16, 17, 19, 20, 22, 24, 25, 31, 34
1034	10, 13, 14, 15, 16, 17, 19, 20, 41
1035	10, 14, 16, 18, 19, 20, 30, 40
1036	10, 14, 16, 17, 19, 20, 22, 24, 30, 35, 57
1037	10, 14, 15, 16, 17, 19, 20, 22, 24, 31, 34
1038	10, 13, 14, 16, 17, 19, 20, 22, 24, 30, 35, 57
1039	10, 13, 14, 15, 16, 17, 19, 20, 22, 24, 31, 34, 52
1040	10, 14, 18, 19, 20, 21, 31, 37, 43
1041	10, 14, 18, 19, 20, 21, 25, 31, 37, 43
1042	10, 14, 15, 17, 19, 20, 21, 31, 34, 43
1043	10, 14, 15, 16, 18, 19, 20, 22, 24, 38
1044	14, 15, 16, 18, 19, 20, 24, 38, 57
1045	10, 14, 15, 16, 18, 19, 20, 21, 31, 42, 57
1046	10, 14, 15, 16, 17, 19, 20, 21, 24, 25, 31, 34, 52
1047	10, 13, 14, 15, 16, 17, 19, 20, 21, 24, 31, 34, 52
1048	10, 13, 14, 15, 16, 17, 19, 20, 21, 24, 31, 33, 52
1049	10, 13, 14, 15, 16, 18, 19, 20, 21, 23, 24, 35
1050	10, 14, 15, 16, 18, 19, 20, 30, 36, 57
1051	10, 13, 14, 15, 16, 17, 19, 20, 21, 22, 23, 24, 27, 30, 34
1052	10, 14, 19, 20, 30
1053	
1054	10, 14, 18, 19, 20, 21, 24, 30, 38
1055	10, 14, 18, 19, 20, 21, 25, 31, 37, 43
1056	10, 13, 14, 15, 16, 17, 19, 20, 22, 24, 30, 34
1057	10, 13, 15, 16, 17, 31, 32, 33
1058	13, 15, 32
1059	10, 13, 15, 16, 17, 21, 32, 33
1060	10, 13, 14, 15, 16, 17, 19, 20, 22, 30, 34
1061	10, 13, 14, 19, 20, 30
1062	
1063	10, 15, 16, 17, 33, 60
1064	10, 15, 16, 17, 33, 43
1065	10, 14, 15, 16, 17, 21, 31, 33
1066	10, 15, 16, 17, 21, 22, 25, 33
1067	10, 13, 14, 15, 16, 17, 19, 20 21, 24, 27, 31, 34, 43
1068	10, 13, 14, 15, 16, 18, 19, 20, 45, 55
1069	10, 13, 14, 16, 18, 19, 20, 30, 45, 58
1070	10, 13, 14, 15, 16, 18, 19, 20, 21, 23, 30, 34
1071	10, 14, 15, 19, 20, 24, 30, 38, 57
1072	10, 13, 14, 15, 17, 19, 20, 30, 41
1073	10, 13, 14, 15, 16, 17, 19, 20, 22, 24, 30, 34
1074	10, 13, 14, 18, 19, 20, 21, 30, 35, 48
1075	10, 14, 15, 16, 18, 19, 20, 21, 22, 24, 38
1076	10, 13, 14, 15, 16, 17, 19, 20, 22, 25, 31, 34
1077	10, 13, 14, 15, 16, 17, 19, 20, 22, 31, 34
1078	10, 13, 14, 15, 16, 17, 19, 20, 21, 24, 27, 43
1079	10, 14, 15, 16, 18, 19, 20, 21, 24, 38
1080	10, 14, 15, 16, 18, 19, 20, 21, 22, 24, 25, 38
1081	
1082	10, 15, 16, 17, 21, 22, 30, 33
1083	
1084	
1085	10, 15, 16, 17, 19, 33, 43
1086	10, 13, 15, 17, 22, 32, 33, 16
1087	10, 13, 14, 16, 18, 19, 20, 21, 34, 48
1088	10, 13, 14, 16, 17, 20, 21, 34
1089	10, 13, 14, 16, 17, 19, 20, 22, 24, 35, 57
1090	10, 13, 14, 15, 17, 19, 20, 31, 41, 57
1091	10, 13, 14, 18, 19, 20, 21, 30, 35
1092	10, 14, 16, 18, 19, 20, 22, 24, 30, 35, 57
1093	10, 14, 19, 20, 38, 57
1094	10, 13, 14, 15, 16, 18, 19, 20, 21, 23, 30, 35
1095	10, 13, 14, 16, 17, 19, 20, 31, 41, 57
1096	10, 14, 15, 16, 17, 19, 20, 30, 41
1097	10, 13, 14, 16, 18, 19, 20, 22, 30, 35
1098	10, 14, 15, 19, 20, 30, 34
1099	10, 14, 19, 20, 27
1100	10, 14, 15, 16, 18, 19, 20, 27, 37
1101	10, 13, 14, 15, 16, 17, 19, 20, 21, 22, 24, 27, 31, 34, 42
1102	10, 14, 17, 19, 20, 34
1103	10, 14, 16, 18, 19, 20, 25, 40
1104	10, 14, 15, 16, 17, 19, 20, 34
1105	10, 13, 14, 15, 16, 18, 19, 20, 21, 23, 35
1106	10, 13, 14, 15, 16, 17, 19, 20, 21, 22, 31, 34
1107	10, 13, 14, 15, 16, 18, 19, 20, 22, 35
1108	10, 13, 14, 15, 16, 17, 19, 20, 22, 24, 31, 34
1109	10, 14, 18, 19, 20, 22, 24, 30, 38, 57
1110	10, 14, 16, 18, 19, 20, 30, 45
1111	12, 15, 16, 22, 33
1112	10, 13, 14, 16, 18, 19, 20, 22, 35
1113	10, 13, 14, 15, 16, 17, 19, 20, 22, 24, 31, 34, 43, 52
1114	10, 14, 15, 18, 19, 20, 30
1115	10, 14, 16, 18, 19, 20, 30, 37
1116	10, 13, 14, 15, 16, 17, 19, 20, 21, 24, 31, 34, 52
1117	10, 14, 15, 16, 17, 19, 20, 22, 24, 25, 31, 34, 52
1118	10, 13, 14, 15, 16, 17, 19, 20, 24, 31, 34, 52
1119	10, 15, 16, 17, 27, 31, 33
1120	10, 14, 15, 16, 18, 19, 20, 30, 37
1121	10, 14, 19, 20, 26
1122	10, 14, 15, 16, 18, 19, 20, 27, 37
1123	10, 15, 16, 17, 26, 31, 33
1124	10, 14, 15, 16, 17, 19, 20, 21, 22, 24, 34
1125	10, 14, 15, 16, 17, 19, 20, 22, 31, 34

†Revised Information. Issue 2

Special Fitments Code—*continued*

Code No.	Code Number Singles
1126	10, 14, 15, 16, 19, 20, 22, 24, 30, 34
1127	10, 13, 14, 15, 17, 19, 20, 31, 41
1128	14, 15, 16, 17, 19, 20, 21, 22, 30
1129	10, 14, 16, 17, 19, 20, 21, 24, 31, 35, 43
1130	10, 13, 14, 16, 18, 19, 20, 35, 48
1131	10, 13, 14, 15, 16, 18, 19, 20, 21, 22, 23, 24, 35
1132	10, 13, 15, 16, 17, 19, 23, 33
1133	10, 14, 15, 16, 17, 19, 20, 22, 24, 30, 34
1134	10, 13, 14, 15, 16, 17, 19, 20, 21, 24, 31, 34, 52
1135	10, 14, 18, 19, 20, 21, 27, 30
1136	10, 13, 14, 15, 16, 18, 19, 20, 22, 24, 31, 34, 43, 52
1137	10, 13, 14, 15, 16, 18, 19, 20, 31, 33
1138	10, 15, 16, 17, 30, 33
1139	10, 14, 15, 16, 17, 19, 20, 22, 24, 31, 34, 52
1140	10, 13, 14, 18, 19, 20, 21, 35, 56
1141	10, 14, 15, 16, 18, 19, 20, 22, 24, 25, 31, 33
1142	10, 14, 19, 20, 25, 43
1143	10, 13, 14, 15, 16, 18, 19, 20, 21, 31, 35, 43
1144	10, 13, 14, 15, 16, 18, 19, 20, 23, 30, 35, 60
1145	10, 14, 16, 18, 19, 20
1146	10, 13, 14, 15, 16, 18, 19, 20, 22, 31, 34
1147	10, 13, 14, 15, 16, 17, 19, 20, 21, 24, 31, 34, 43, 52
1148	10, 14, 15, 16, 17, 19, 20, 22, 24, 31, 34
1149	10, 13, 14, 15, 16, 17, 19, 20, 22, 23, 24, 31, 34
1150	10, 14, 15, 16, 18, 19, 20, 45
1151	10, 15, 16, 17, 33, 42
1152	10, 13, 14, 15, 18, 19, 20, 21, 30, 35, 60
1153	10, 15, 16, 17, 30, 33
1154	10, 15, 16, 17, 19, 25, 33
1155	10, 15, 16, 17, 25, 31, 33
1156	10, 13, 14, 19, 20, 26
1157	10, 15, 16, 17, 33, 62
1158	10, 13, 14, 15, 16, 17, 19, 20, 22, 24, 31, 52
1159	10, 13, 14, 15, 17, 19, 20, 21, 30, 34
1160	10, 14, 15, 16, 17, 19, 20, 21, 22, 24, 25, 31, 34
1161	10, 13, 14, 15, 16, 18, 19, 20, 21, 23, 34
1162	10, 13, 14, 15, 16, 17, 19, 20, 21, 22, 24, 30, 34
1163	10, 14, 18, 19, 20, 30, 40
1164	10, 14, 18, 19, 20, 22, 27, 30
1165	10, 14, 15, 16, 17, 19, 20, 21, 22, 24, 30, 34
1166	10, 14, 15, 16, 17, 19, 20, 28, 30, 41
1167	10, 14, 18, 19, 20, 22, 24, 30, 38
1168	10, 15, 16, 17, 21, 22, 33, 62
1169	10, 15, 16, 17, 23, 25, 33
1170	10, 14, 15, 16, 18, 19, 20, 21, 31, 36, 57
1171	10, 14, 15, 16, 18, 19, 20, 37
1172	10, 14, 16, 17, 19, 20, 21, 23, 28, 35
1173	10, 13, 14, 15, 16, 18, 19, 20, 30, 35, 58
1174	10, 13, 14, 15, 16, 17, 19, 20, 22, 24, 56
1175	14, 16, 17, 19, 20, 25, 30, 35, 57
1176	14, 15, 16, 18, 19, 20, 26, 35, 37
1177	10, 13, 14, 16, 17, 19, 20, 22, 23, 24, 35, 57
1178	10, 14, 15, 16, 18, 19, 20, 21, 24, 25, 31, 35, 43
1179	10, 14, 15, 16, 17, 19, 20, 22, 24, 31, 35, 57
1180	10, 14, 15, 16, 18, 19, 20, 21, 23, 24, 35, 55
1181	10, 14, 16, 18, 19, 20, 40
1182	10, 14, 15, 18, 19, 20
1183	10, 13, 14, 15, 16, 17, 19, 20, 22, 24
1184	10, 14, 18, 19, 20, 21, 26
1185	10, 14, 16, 17, 19, 20, 22, 24, 31, 35, 57
1186	10, 13, 14, 15, 16, 17, 19, 20, 21, 22, 24, 27, 34, 42
1187	10, 13, 14, 15, 16, 19, 20, 21, 25, 31, 34, 42
1188	15, 16
1189	10, 14, 15, 16, 17, 19, 20, 21, 22, 24, 31, 34, 56
1190	14, 15, 16, 17, 19, 20, 21, 22, 30, 34
1191	15, 16, 17, 25, 33
1192	10, 13, 14, 15, 17, 19, 20, 21, 34
1193	10, 13, 14, 17, 19, 20, 22, 24, 31, 35, 57
1194	10, 14, 16, 18, 19, 20, 30, 39, 60
1195	10, 13, 14, 16, 17, 19, 20, 22, 24, 31, 35, 57
1196	10, 13, 14, 15, 16, 17, 19, 20, 22, 24, 31, 56
1197	10, 13, 14, 15, 16, 17, 19, 20, 21, 22, 24, 27, 31, 34
1198	10, 14, 15, 16, 18, 19, 20, 21, 24, 31, 35, 43, 56
1199	10, 13, 14, 18, 19, 20, 21, 31, 35, 56
1200	10, 14, 16, 17, 19, 20, 23, 28, 35, 62
1201	10, 13, 14, 15, 16, 19, 20, 21, 23, 34
1202	10, 13, 14, 15, 16, 18, 19, 20, 21, 22, 23, 35
1203	10, 14, 15, 16, 19, 20, 22, 23, 36
1204	14, 15, 16, 18, 19, 20, 24, 25, 38, 57
1205	12, 13, 14, 15, 17, 19, 20, 31, 41, 57
1206	10, 14, 16, 17, 19, 20, 21, 22, 23, 28, 35, 62
1207	10, 13, 14, 15, 16, 17, 19, 20, 22, 24, 25, 31, 34, 52
1208	10, 13, 14, 15, 16, 17, 19, 20, 22, 24, 25, 31, 34, 42, 52
1209	10, 14, 16, 17, 19, 20, 22, 24, 25, 31, 35, 57
1210	10, 14, 18, 19, 20, 21, 23, 31, 37
1211	10, 13, 14, 18, 19, 20, 30, 35, 57
1212	14, 16, 17, 19, 20, 25, 31, 35, 57
1213	10, 14, 15, 16, 18, 19, 20, 21, 23, 26, 37, 57
1214	10, 14, 15, 16, 18, 19, 20, 21, 23, 26, 37
1215	15, 16, 17, 28, 33
1216	12, 13, 14, 15, 17, 19, 20, 31, 41
1217	14, 16, 17, 19, 20, 22, 24, 25, 31, 35, 57
1218	10, 13, 14, 15, 16, 18, 19, 20, 21, 22, 23, 24, 30, 35
1219	10, 14, 17, 19, 20, 30, 34
1220	10, 13, 14, 15, 17, 19, 20, 21, 23, 30, 34
1221	10, 13, 14, 15, 16, 17, 19, 20, 21, 27, 31, 34, 43
1222	14, 15, 16, 17, 19, 20, 29, 41
1223	10, 14, 19, 20, 24, 30, 38, 57
1224	10, 14, 19, 20, 23, 34
1225	10, 14, 15, 16, 18, 19, 20, 21, 25, 31, 35, 43
1226	13, 14, 16, 17, 19, 20, 22, 23, 24, 35, 57
1227	10, 14, 15, 16, 17, 19, 20, 31, 41
1228	10, 14, 16, 18, 19, 20, 31, 40
1229	10, 13, 14, 15, 16, 17, 19, 20, 21, 22, 24, 31, 34, 43, 52
1230	10, 13, 14, 15, 16, 17, 19, 20, 21, 22, 24, 27, 31, 34, 43
1231	10, 13, 14, 18, 19, 20, 35, 48
1232	10, 13, 14, 15, 16, 17, 19, 20, 21, 22, 24, 31, 34, 52
1233	10, 14, 17, 19, 20, 22, 30, 34
1234	10, 14, 16, 17, 19, 20, 22, 23, 24, 35, 57
1235	10, 14, 16, 17, 19, 20, 22, 24, 35, 57
1236	10, 14, 16, 17, 19, 20, 28, 41
1237	10, 14, 15, 16, 17, 19, 20, 28, 41, 57
1238	10, 14, 15, 16, 17, 19, 20, 28, 41
1239	14, 15, 17, 19, 20, 25, 34
1240	14, 16, 18, 19, 20, 25, 40
1241	12, 14, 15, 16, 17, 19, 20, 31, 41, 57
1242	10, 13, 14, 15, 16, 19, 20, 21, 23, 24, 34
1243	12, 13, 14, 16, 17, 19, 20, 22, 23, 24, 35, 57
1244	12, 14, 16, 17, 19, 20, 22, 24, 25, 31, 35, 57
1245	14, 16, 17, 19, 20, 22, 25, 31, 35, 57, 61
1246	12, 14, 16, 17, 19, 20, 22, 24, 25, 31, 35, 57, 61
1247	11, 14, 15, 16, 19, 20, 28, 41, 57
1248	10, 14, 16, 17, 19, 20, 22, 24, 31, 35, 57, 61
1249	11, 14, 15, 16, 17, 19, 20, 28, 41
1250	12, 14, 15, 16, 17, 19, 20, 31, 41
1251	10, 14, 15, 16, 17, 19, 20, 24, 31, 34
1252	10, 14, 18, 19, 20, 21, 35
1253	10, 13, 14, 18, 19, 20, 21, 35, 48
1254	10, 14, 15, 16, 17, 19, 20, 21, 23, 24, 34
1255	14, 19, 20, 26
1256	10, 13, 14, 15, 18, 19, 20, 21, 30, 35, 48
1257	10, 14, 15, 17, 19, 20, 28, 41
1258	10, 14, 15, 16, 18, 19, 20, 22, 26, 37
1259	13, 14, 19, 20, 30
1260	10, 14, 16, 18, 19, 20, 21, 40
1261	10, 13, 14, 15, 16, 17, 19, 20, 21, 22, 24, 31, 34
1262	10, 14, 19, 20, 25, 26
1263	10, 13, 14, 15, 19, 20, 30, 33
1264	14, 16, 17, 19, 20, 30, 35, 57
1265	10, 14, 15, 16, 17, 19, 20, 22, 24, 31, 34, 56
1266	10, 14, 16, 18, 19, 20, 21, 31, 40
1267	10, 14, 15, 16, 18, 19, 20, 21, 31, 36
1268	10, 13, 14, 15, 16, 18, 19, 20, 21, 23, 30
1269	10, 13, 14, 15, 16, 18, 19, 20, 21, 22, 23, 30, 34
1270	12, 15, 16, 17, 33
1271	10, 15, 16, 17, 19, 30, 33
1272	10, 13, 14, 15, 16, 18, 19, 20, 21, 22, 23, 30, 35
1273	10, 13, 14, 17, 19, 20, 21, 30, 35, 48
1274	10, 14, 15, 16, 18, 19, 20, 21, 24, 31, 35, 42, 56
1275	10, 14, 15, 16, 18, 19, 20, 26, 31, 37
1276	16, 19, 25, 28, 33
1277	15, 16, 17, 21, 22, 23, 25, 33
1278	10, 14, 16, 19, 22, 24, 25, 31, 35, 57, 61
1279	10, 13, 14, 15, 18, 19, 20, 30, 45
1280	10, 13, 14, 15, 16, 17, 19, 20, 21, 23, 25, 34
1281	10, 13, 14, 15, 16, 17, 19, 20, 21, 23, 30, 34
1282	10, 13, 14, 16, 18, 19, 20, 21, 22, 23, 34
1283	10, 14, 19, 20, 21, 35
1284	14, 15, 16, 17, 19, 20, 25, 35, 48, 57, 61
1285	10, 14, 15, 16, 18, 19, 20, 21, 22, 31, 35, 43

†Revised Information. Issue 2

Special Fitments Code—*continued*

Code No.	Code Number Singles
1286	10, 13, 14, 16, 17, 19, 20, 21, 34
1287	10, 13, 14, 18, 19, 20, 21, 22, 23, 35
1288	10, 14, 15, 16, 18, 19, 20, 21, 22, 23, 35
1289	10, 13, 14, 18, 19, 20, 21, 23, 34
1290	13, 14, 15, 17, 19, 20, 31, 34, 43
1291	10, 13, 14, 15, 17, 19, 20, 21, 31, 34, 43
1292	14, 15, 18, 19, 20, 25, 34
1293	10, 14, 16, 18, 19, 20, 37
1294	10, 13, 14, 15, 16, 18, 19, 20, 30, 45, 60
1295	15, 16, 17, 21, 22, 23, 25, 33, 57
1296	10, 13, 14, 15, 18, 19, 20, 45
1297	10, 13, 14, 15, 16, 17, 19, 20, 31, 34
1298	11, 14, 15, 16, 17, 19, 20, 30, 41, 57
1299	10, 14, 16, 17, 19, 20, 22, 24, 25, 31, 35, 57, 61
1300	10, 14, 16, 17, 19, 20, 22, 24, 25, 31, 35, 61
1301	10, 13, 14, 15, 18, 19, 20, 21, 23, 35
1302	10, 13, 14, 15, 18, 19, 20, 21, 22, 23, 35
1303	10, 13, 14, 15, 16, 17, 19, 20, 22, 24, 31, 34, 42, 52
1304	10, 13, 15, 16, 17, 22, 30, 32, 33
1305	10, 13, 15, 16, 17, 21, 22, 32, 33
1306	10, 13, 14, 16, 18, 19, 20, 30, 45, 60
1307	12, 14, 19, 20, 26
1308	10, 14, 15, 16, 17, 19, 20, 41
1309	11, 14, 16, 17, 19, 20, 28, 30, 41
1310	14, 18, 19, 20, 21, 23, 36
1311	10, 13, 14, 15, 16, 17, 19, 20, 21, 24, 30, 34
1312	10, 14, 15, 18, 19, 20, 21, 23, 30, 36
1313	14, 15, 18, 19, 20, 21, 23, 30, 36
1314	10, 13, 15, 16, 17, 19, 21, 32, 33
1315	10, 14, 15, 16, 17, 19, 20, 22, 24, 31, 35, 48, 57, 61
1316	12, 14, 15, 16, 18, 19, 20, 21, 24, 25, 38, 57
1317	12, 13, 14, 15, 16, 17, 19, 20, 21, 22, 24, 31, 34, 52
1318	10, 13, 14, 15, 16, 18, 19, 20, 24, 27, 34
1319	10, 14, 18, 19, 20, 21, 23, 36
1320	11, 14, 15, 16, 17, 19, 20, 28, 30, 41
1321	12, 14, 16, 18, 19, 20, 30, 37
1322	10, 14, 15, 16, 18, 19, 20, 21, 31, 36, 42
1323	10, 13, 14, 17, 19, 20, 22, 24, 31, 34, 52
1324	10, 13, 14, 15, 16, 17, 19, 20, 22, 24, 25, 35, 48, 57, 61
1325	10, 14, 15, 16, 17, 19, 20, 21, 22, 24, 31, 35, 48, 57, 61
1326	12, 14, 15, 16, 18, 19, 20, 23, 24, 25, 38, 57
1327	10, 13, 14, 17, 19, 20, 22, 30, 34
1328	10, 14, 17, 19, 20, 21, 22, 30, 34
1329	10, 13, 14, 15, 17, 19, 20, 21, 23, 31, 34
1330	10, 13, 14, 15, 16, 17, 19, 20, 31, 41, 57
1331	10, 13, 14, 15, 16, 17, 19, 20, 21, 22, 24, 25, 31, 34
1332	10, 14, 15, 16, 17, 19, 20, 22, 25, 31, 34
1333	10, 13, 14, 15, 16, 19, 20, 21, 23, 25, 34
1334	10, 14, 15, 16, 17, 19, 20, 22, 24, 31, 35, 48, 57, 61, 62
1335	10, 13, 14, 15, 16, 17, 19, 20, 30, 41, 57
1336	10, 14, 16, 18, 19, 20, 21, 31, 35, 43, 48
1337	10, 14, 15, 16, 17, 19, 20, 31, 41, 57
1338	10, 14, 15, 16, 17, 19, 20, 41, 57
1339	10, 14, 15, 16, 17, 19, 20, 30, 41, 57
1340	11, 14, 16, 17, 19, 20, 28, 30, 41, 57
1341	11, 14, 15, 16, 17, 19, 20, 28, 30, 41, 57
1342	10, 13, 14, 15, 16, 18, 19, 20, 21, 22, 31, 35, 43
1343	10, 13, 14, 15, 16, 18, 19, 20, 22, 30, 35
1344	10, 14, 15, 16, 18, 19, 20, 30, 35
1345	10, 14, 16, 17, 19, 20, 28, 30, 41, 57
1346	13, 14, 16, 17, 19, 20, 22, 23, 34, 35, 57
1347	10, 14, 16, 17, 19, 20, 22, 24, 25, 31, 35, 48, 61
1348	10, 14, 16, 18, 19, 20, 21, 30, 40
1349	10, 14, 15, 16, 18, 19, 20, 31, 37
1350	10, 13, 14, 15, 16, 17, 19, 20, 22, 24, 25, 31, 34, 43, 52
1351	12, 15, 16, 17, 31, 33
1352	10, 15, 16, 17, 22, 25, 33
1353	10, 15, 16, 17, 22, 31, 33
1354	10, 13, 15, 16, 17, 22, 23, 32, 33
1355	10, 14, 16, 17, 19, 20, 22, 24, 30, 35, 48
1356	10, 13, 14, 15, 17, 19, 20, 21, 31, 34
1357	10, 14, 18, 19, 20, 21, 31, 35, 43, 48
1358	10, 13, 14, 15, 16, 18, 19, 20, 24, 27, 33
1359	10, 14, 18, 19, 20, 31, 35
1360	10, 13, 14, 15, 16, 17, 19, 20, 22, 24, 30, 35, 57
1361	10, 13, 14, 15, 16, 17, 19, 20, 22, 24, 25, 31, 35, 48, 57, 61, 62
1362	10, 14, 15, 16, 17, 19, 20, 21, 25, 31, 34
1363	10, 14, 18, 19, 20, 35
1364	10, 14, 18, 19, 20, 30, 35
1365	14, 16, 18, 19, 20, 40
1366	10, 13, 14, 15, 18, 19, 20, 21, 23, 35, 48
1367	10, 14, 16, 18, 19, 20, 39, 55
1368	10, 13, 14, 15, 17, 19, 20, 35
1369	14, 15, 16, 18, 19, 20, 22, 23, 24, 25, 38, 57
1370	10, 14, 15, 16, 17, 19, 20, 22, 23, 24, 35, 48, 57, 61
1371	10, 14, 18, 19, 20, 21, 22, 31, 37, 43, 48
1372	10, 14, 18, 19, 20, 21, 31, 37, 43, 48
1373	10, 13, 14, 15, 16, 18, 19, 20, 21, 30, 35
1374	10, 14, 16, 17, 19, 20, 21, 22, 24, 25, 31, 35, 48, 61
1375	10, 14, 16, 17, 19, 20, 21, 22, 24, 25, 31, 34, 48, 61
1376	10, 14, 15, 16, 18, 19, 20, 21, 23, 35
1377	14, 15, 16, 18, 19, 20, 23, 24, 25, 38, 57
1378	10, 14, 15, 16, 18, 19, 20, 21, 22, 23, 24, 30, 35, 57
1379	10, 14, 15, 16, 17, 19, 20, 22, 24, 35, 48, 57, 61
1380	10, 14, 15, 16, 18, 19, 20, 21, 22, 31, 36, 43, 48
1381	10, 14, 15, 16, 18, 19, 20, 21, 23, 34, 55
1382	10, 14, 15, 16, 18, 19, 20, 21, 24, 31, 34, 43
1383	10, 14, 15, 16, 17, 19, 20, 22, 31, 34, 43
1384	10, 13, 14, 15, 16, 17, 19, 20, 22, 31, 34, 43
1385	10, 14, 15, 16, 17, 19, 20, 21, 22, 30, 34
1386	10, 14, 15, 16, 18, 19, 20, 31, 34, 43
1387	10, 14, 15, 16, 18, 19, 20, 21, 31, 34, 43
1388	10, 14, 15, 16, 17, 19, 20, 22, 24, 30, 35, 57, 62
1389	14, 15, 16, 17, 19, 20, 30, 35, 57
1390	10, 14, 15, 16, 18, 19, 20, 23, 30, 34
1391	10, 14, 15, 16, 18, 19, 20, 21, 23, 30, 34
1392	10, 13, 14, 15, 16, 17, 19, 20, 22, 23, 24, 30, 34
1393	10, 13, 14, 15, 17, 19, 20, 22, 24, 30, 34
1394	10, 14, 15, 16, 18, 19, 20, 21, 31, 34, 43, 56
1395	10, 14, 15, 16, 18, 19, 20, 31, 37, 57
1396	10, 14, 15, 16, 18, 19, 20, 25, 31, 34, 43
1397	10, 14, 15, 16, 17, 19, 20, 21, 30, 34, 48
1398	11, 14, 16, 17, 19, 20, 28, 41
1399	10, 14, 15, 16, 17, 19, 20, 21, 34
1400	15, 22
1401	10, 15, 16, 17, 21, 23, 25, 33
1402	10, 13, 15, 16, 17, 25, 32, 33
1403	10, 13, 14, 15, 16, 17, 19, 20, 22, 23, 25, 34, 44
1404	10, 14, 15, 16, 19, 20, 37
1405	11, 14, 15, 16, 17, 19, 20, 41
1406	12, 14, 19, 20, 28, 30
1407	10, 13, 14, 15, 16, 17, 19, 20, 22, 24, 30, 35, 57, 61
1408	10, 13, 14, 15, 16, 17, 19, 20, 22, 24, 25, 31, 34, 52
1409	10, 14, 15, 16, 17, 19, 20, 21, 22, 24, 25, 31, 34, 52
1410	10, 14, 15, 16, 17, 19, 20, 22, 24, 31, 34, 52, 56
1411	10, 14, 18, 19, 20, 21, 24, 35
1412	12, 14, 19, 20, 30
1413	10, 13, 14, 15, 16, 17, 19, 20, 24, 30, 34
1414	10, 14, 15, 19, 20, 33
1415	10, 13, 14, 15, 16, 17, 19, 20, 22, 24, 35, 57, 62
1416	10, 14, 15, 16, 17, 19, 20, 22, 31, 34, 56
1417	10, 14, 15, 16, 18, 19, 20, 21, 23, 36, 57
1418	10, 14, 16, 19, 20, 30, 35
1419	10, 14, 18, 19, 20, 21, 23, 35
1420	12, 15, 16, 17, 33
1421	10, 15, 16, 17, 21, 22, 33, 47
1422	10, 13, 14, 15, 16, 18, 19, 20, 30, 45, 58
1423	10, 13, 14, 16, 18, 19, 20, 28, 30, 45, 58
1424	10, 14, 16, 18, 19, 20, 28, 30, 45
1425	10, 13, 14, 16, 18, 19, 20, 28, 30, 45
1426	10, 13, 14, 15, 16, 18, 19, 20, 45, 65
1427	13, 14, 15, 16, 18, 19, 20, 45, 65
1428	10, 13, 14, 16, 19, 20, 25, 65
1429	10, 13, 14, 15, 16, 18, 19, 20, 45, 55, 65
1430	10, 13, 14, 15, 16, 18, 19, 20, 25, 45, 55, 65
1431	10, 13, 14, 15, 16, 19, 20, 21, 22, 25, 31, 34, 43, 44, 48, 62
1432	10, 14, 15, 16, 19, 20, 30
1433	10, 14, 15, 16, 17, 19, 20, 31, 33
1434	10, 13, 14, 15, 16, 18, 19, 20, 30, 36, 57
1435	10, 14, 15, 16, 17, 19, 20, 21, 23, 24, 25, 34
1436	12, 13, 14, 16, 18, 19, 20, 30, 37
1437	10, 13, 14, 15, 16, 19, 20, 21, 22, 25, 31, 34, 43, 48, 62
1438	10, 13, 14, 15, 16, 17, 19, 20, 21, 22, 24, 31, 34, 43
1439	10, 13, 14, 15, 16, 17, 19, 20, 21, 22, 24, 31, 34, 43, 62
1440	10, 14, 15, 16, 17, 19, 20, 21, 22, 24, 31, 34, 43
1441	10, 15, 16, 17, 21, 22, 23, 31, 33
1442	10, 14, 15, 16, 18, 19, 20, 21, 22, 24, 25, 38, 65
1443	10, 14, 15, 16, 18, 19, 20, 21, 22, 24, 25, 38

†Revised Information. Issue 2

Special Fitments Code—*continued*

Code No.	Code Number Singles
1444	10, 14, 15, 16, 17, 19, 20, 21, 22, 23, 24, 26, 34
1445	14, 15, 16, 18, 19, 20, 25, 38, 44, 57, 65
1446	12, 14, 15, 16, 18, 19, 20, 25, 38, 44, 57, 62, 65
1447	10, 14, 15, 16, 18, 19, 20, 22, 23, 24, 38, 65
1448	10, 14, 15, 16, 18, 19, 20, 22, 24, 38, 65
1449	14, 15, 16, 17, 19, 20, 21, 23, 24, 34
1450	10, 13, 14, 16, 18, 19, 20, 21, 30, 37
1451	10, 13, 14, 15, 16, 18, 19, 20, 21, 22, 23, 35, 62
1452	10, 14, 16, 18, 19, 20, 22, 39, 44, 62, 65
1453	10, 14, 15, 16, 17, 19, 20, 22, 30, 34
1454	10, 14, 15, 16, 18, 19, 20, 22, 24, 30, 38
1455	10, 14, 15, 16, 17, 19, 20, 21, 22, 23, 24, 26, 34, 62
1456	10, 14, 15, 16, 18, 19, 20, 22, 23, 24, 29, 38, 65
1457	10, 14, 15, 16, 17, 19, 20, 22, 25, 34
1458	12, 14, 15, 16, 17, 19, 20, 21, 22, 26, 31, 34
1459	14, 15, 16, 17, 19, 20, 22, 25, 31, 34, 44
1460	12, 13, 14, 16, 18, 19, 20, 21, 30, 37
1461	10, 13, 14, 16, 18, 19, 20, 22, 39, 44, 62, 65
1462	10, 14, 15, 16, 17, 19, 20, 21, 22, 24, 26, 31, 34, 43, 62
1463	10, 14, 16, 18, 19, 20, 22, 30, 40, 62
1464	10, 14, 15, 16, 18, 19, 20, 21, 30, 36, 57
1465	10, 14, 15, 16, 18, 19, 20, 21, 22, 24, 38, 65
1466	12, 14, 16, 18, 19, 20, 21, 29, 30, 37
1467	10, 14, 15, 16, 18, 19, 20, 22, 24, 38, 57, 65
1468	12, 14, 15, 16, 18, 19, 20, 25, 38, 44, 57, 65
1469	10, 14, 15, 16, 18, 19, 20, 22, 24, 30, 38, 57
1470	10, 14, 15, 16, 19, 20, 24, 30, 38
1471	10, 14, 15, 16, 18, 19, 20, 21, 22, 24, 30, 38
1472	10, 14, 15, 16, 18, 19, 20, 21, 25, 31, 36, 42, 57
1473	10, 14, 15, 16, 18, 19, 20, 21, 36, 57
1474	10, 14, 15, 16, 18, 19, 20, 25, 31, 36, 43, 57
1475	10, 14, 15, 16, 18, 19, 20, 45, 65
1476	10, 13, 16, 17, 28, 32, 33
1477	10, 14, 15, 16, 17, 19, 20, 22, 24, 35, 48, 57, 61, 62
1478	14, 16, 19, 33, 44
1479	14, 16, 19, 33
1480	10, 14, 15, 16, 18, 19, 20, 22, 24, 30, 38, 63
1481	10, 14, 15, 16, 18, 19, 20, 24, 30, 38, 57
1482	10, 13, 14, 15, 16, 17, 19, 20, 21, 22, 23, 24, 26, 34
1483	10, 13, 14, 18, 19, 20, 35, 57
1484	10, 14, 15, 16, 19, 20, 22, 30, 38, 47, 57
1485	10, 14, 15, 16, 19, 20, 22, 24, 30, 38, 57
1486	10, 13, 14, 15, 16, 17, 19, 20, 21, 22, 24, 26, 31, 34, 43
1487	10, 13, 14, 18, 19, 20, 21, 23, 36
1488	10, 13, 14, 15, 18, 19, 20, 21, 22, 23, 25, 35
1489	10, 13, 14, 16, 18, 19, 20, 22, 23, 34, 44, 48, 62
1490	10, 13, 14, 18, 19, 20, 21, 24, 26, 31, 35, 43, 48
1491	10, 14, 18, 19, 20, 21, 24, 35, 48
1492	10, 13, 14, 16, 18, 19, 20, 22, 31, 35
1493	10, 14, 15, 16, 18, 19, 20, 36, 57
1494	10, 13, 14, 15, 17, 19, 20, 21, 31, 34, 43, 48
1495	10, 13, 14, 18, 19, 20, 31, 35, 57
1496	10, 13, 14, 18, 19, 20, 23, 34, 62
1497	10, 13, 14, 15, 16, 17, 19, 20, 21, 22, 23, 24, 26, 31, 34
1498	10, 14, 15, 16, 18, 19, 20, 31, 36, 43, 57
1499	10, 15, 16, 17, 33, 55
1500	10, 13, 14, 15, 16, 17, 19, 21, 22, 32, 33
1501	10, 13, 15, 16, 17, 19, 21, 32, 33, 47
1502	10, 14, 16, 17, 19, 20, 28, 30, 41
1503	10, 13, 15, 16, 17, 19, 32, 33, 47
1504	14, 15, 16, 17, 19, 20, 23, 24, 34
1505	10, 13, 14, 16, 18, 19, 20, 39, 44, 65
1506	10, 14, 16, 18, 19, 20, 39, 44, 65
1507	10, 14, 16, 18, 19, 20, 39, 65
1508	14, 17, 19, 20, 34
1509	10, 14, 15, 16, 18, 19, 20, 22, 24, 38, 44, 65
1510	10, 14, 15, 16, 18, 19, 20, 22, 24, 38, 44, 57, 65
1511	10, 13, 14, 15, 16, 17, 19, 20, 21, 31, 34, 43
1512	10, 13, 14, 16, 18, 19, 20, 30, 37
1513	10, 13, 14, 15, 16, 18, 19, 20, 21, 37
1514	10, 14, 15, 16, 18, 19, 20, 21, 22, 24, 38, 44, 57, 65
1515	10, 14, 15, 16, 19, 20, 24, 30, 38, 57
1516	10, 13, 14, 15, 16, 17, 19, 20, 22, 24, 25, 31, 34
1517	14, 19, 20, 25, 26
1518	10, 13, 14, 15, 16, 17, 19, 20, 21, 23, 34
1519	10, 13, 14, 15, 16, 17, 19, 20, 22, 24, 31, 34
1520	14, 15, 16, 18, 19, 20, 25, 44
1521	10, 13, 14, 15, 16, 18, 19, 20, 21, 23, 29, 37
1522	10, 15, 16, 17, 21, 22, 31, 33
1523	12, 14, 15, 16, 18, 19, 20, 37

Code No.	Code Number Singles
1524	14, 19, 20, 26, 28
1525	10, 15, 16, 18, 19, 20, 31, 40
1526	10, 15, 16, 18, 19, 20, 40
1527	11, 16, 17, 28, 33
1528	10, 14, 15, 16, 18, 19, 20, 31, 40
1529	10, 14, 15, 16, 18, 19, 20, 40
1530	10, 14, 15, 16, 17, 19, 20, 21, 22, 23, 24, 27, 34, 48, 62
1531	12, 15, 24, 54
1532	12, 14, 16, 18, 19, 20, 29, 30, 37
1533	10, 16, 17, 28, 33
1534	10, 15, 16, 19, 20, 30, 38
1535	10, 14, 15, 16, 18, 19, 20, 22, 24, 25, 38, 65
1536	10, 14, 15, 16, 18, 19, 20, 21, 22, 23, 24, 38, 65
1537	10, 14, 15, 16, 18, 19, 20, 23, 26, 37
1538	12, 13, 14, 15, 16, 18, 19, 20, 37
1539	10, 13, 14, 15, 16, 18, 19, 20, 21, 23, 36, 48
1540	14, 18, 19, 20, 21, 35
1541	10, 13, 14, 17, 19, 20, 21, 35
1542	10, 13, 14, 15, 16, 17, 19, 20, 22, 24, 31, 34, 56
1543	10, 14, 15, 16, 17, 19, 20, 21, 22, 25, 31, 34
1544	10, 13, 14, 15, 16, 18, 19, 20, 21, 23, 30, 36, 48
1545	10, 13, 14, 15, 16, 18, 19, 20, 21, 23, 29, 37
1546	10, 13, 14, 15, 16, 18, 19, 20, 21, 31, 36, 42, 57
1547	10, 13, 14, 18, 19, 20, 30, 35
1548	10, 14, 18, 19, 20, 21, 22, 31, 37, 43, 44
1549	10, 14, 15, 19, 20, 26, 34
1550	10, 13, 14, 18, 19, 20, 31, 35
1551	12, 15, 33
1552	10, 13, 14, 15, 17, 19, 20, 21, 23, 30, 34, 48
1553	10, 14, 16, 18, 19, 20, 39, 44, 55, 65
1554	10, 14, 18, 19, 20, 21, 22, 23
1555	14, 15, 16, 17, 19, 20, 22, 31
1556	10, 13, 14, 15, 16, 17, 19, 20, 22, 24, 34, 56
1557	10, 13, 14, 15, 16, 17, 19, 20, 25, 31, 41
1558	14, 16, 18, 19, 20, 30, 40
1559	10, 13, 14, 16, 17, 19, 20, 21, 30, 34
1560	10, 14, 18, 19, 20, 21, 23, 34
1561	10, 13, 14, 18, 19, 20, 21, 23, 35
1562	10, 14, 15, 16, 18, 19, 20, 45, 55, 65
1563	14, 15, 16, 18, 19, 20, 45, 65
1564	10, 13, 14, 16, 18, 19, 20, 30, 35
1565	10, 13, 14, 15, 16, 18, 19, 20, 36, 65
1566	10, 13, 14, 16, 18, 19, 20, 21, 35
1567	10, 14, 15, 16, 18, 19, 20, 24, 25, 27, 34
1568	10, 14, 16, 18, 19, 20, 30, 37, 57
1569	10, 14, 16, 18, 19, 20, 22, 40
1570	10, 13, 14, 16, 18, 19, 20, 21, 34
1571	10, 13, 14, 15, 16, 18, 19, 20, 21, 22, 35
1572	10, 13, 14, 15, 16, 18, 19, 20, 25, 45, 65
1573	10, 13, 14, 15, 16, 18, 19, 20, 31, 36, 57
1574	10, 13, 14, 16, 17, 19, 20, 21, 22, 24, 30, 35, 48
1575	10, 14, 16, 17, 19, 20, 21, 22, 24, 30, 35, 48
1576	21, 22, 28
1577	10, 14, 15, 16, 18, 19, 20, 22, 38, 44, 57, 65
1578	10, 14, 15, 16, 18, 19, 20, 22, 25, 38, 44, 57, 65
1579	14, 15, 16, 18, 19, 20, 25, 38, 44, 65
1580	10, 13, 14, 16, 18, 19, 20, 39, 65
1581	10, 14, 15, 16, 17, 19, 20, 21, 22, 24, 31, 34
1582	13, 14, 16, 18, 19, 20, 28, 45, 65
1583	10, 13, 14, 16, 17, 19, 20, 21, 22, 24, 25, 31, 35, 43, 48, 61
1584	10, 14, 16, 17, 19, 20, 21, 22, 24, 25, 31, 35, 43, 48, 61
1585	14, 15, 16, 19, 44
1586	15, 55
1587	15, 21
1588	10, 13, 15, 16, 17, 19, 22, 32, 33
1589	10, 14, 15, 16, 18, 19, 20, 22, 38, 57, 65
1590	10, 14, 15, 16, 17, 19, 20, 23, 34
1591	10, 14, 16, 17, 19, 20, 23, 28, 34
1592	10, 14, 18, 19, 20, 23, 34, 62
1593	12, 14, 18, 19, 20, 26
1594	10, 14, 18, 19, 20, 26
1595	10, 14, 15, 16, 18, 19, 20, 21, 31, 34, 43, 44, 48
1596	10, 13, 14, 15, 16, 18, 19, 20, 21, 31, 34, 43, 44, 48
1597	10, 13, 14, 18, 19, 20, 35
1598	10, 13, 14, 15, 16, 18, 19, 20, 37
1599	10, 13, 14, 15, 16, 18, 19, 20, 26, 37
1600	10, 14, 15, 16, 18, 19, 20, 21, 26, 37
1601	14, 15, 16, 17, 19, 20, 21, 22, 31, 34
1602	12, 14, 15, 16, 17, 19, 20, 22, 25, 31, 34, 42

†Revised Information. Issue 2

Special Fitments Code—*continued*

Code No.	Code Number Singles
1603	14, 15, 16, 17, 19, 20, 22, 25, 31, 34
1604	10, 14, 15, 16, 17, 19, 20, 22, 24, 31, 34, 43, 52
1605	10, 13, 14, 16, 18, 19, 20, 22, 34, 44, 48
1606	10, 14, 15, 16, 17, 19, 20, 22, 24, 30, 35, 48, 57, 62
1607	10, 13, 14, 15, 16, 18, 19, 20, 29, 37
1608	10, 14, 15, 16, 17, 19, 20, 22, 24, 30, 35, 48, 62
1609	10, 13, 14, 15, 16, 17, 19, 20, 22, 24, 30, 35, 48, 57, 62
1610	14, 15, 16, 18, 19, 20, 22, 23, 25, 40, 44
1611	10, 15, 16, 17, 21, 22, 31, 33, 44
1612	10, 14, 15, 16, 18, 19, 20, 22, 24, 25, 38, 44, 57, 65
1613	10, 13, 14, 18, 19, 20, 21, 35, 55
1614	10, 14, 15, 16, 18, 19, 20, 31, 37, 56
1615	14, 16, 18, 19, 20, 40, 44
1616	10, 13, 14, 15, 16, 17, 19, 20, 21, 22, 24, 25, 31, 34, 52
1617	10, 14, 17, 19, 20, 30, 34, 48
1618	12, 14, 15, 16, 17, 19, 20, 22, 25, 31, 34
1619	10, 14, 18, 19, 20, 21, 30, 35
1620	10, 13, 14, 15, 16, 17, 19, 20, 21, 22, 24, 26, 31, 34
1621	10, 14, 15, 16, 18, 19, 20, 37, 55
1622	12, 15, 16
1623	10, 14, 17, 19, 20, 21, 22, 23, 24, 30, 35, 48
1624	10, 14, 16, 17, 19, 20, 21, 22, 23, 24, 30, 35, 48
1625	10, 14, 16, 17, 19, 20, 21, 22, 24, 31, 35, 43, 48, 61, 65
1626	10, 13, 15, 16, 17, 23, 32, 33
1627	10, 14, 17, 19, 20, 21, 22, 24, 30, 35, 48
1628	10, 13, 14, 16, 18, 19, 20, 21, 35, 62
1629	14, 15, 16, 17, 19, 20, 31, 41
1630	15, 17, 19, 33, 44
1631	12, 14, 15, 16, 18, 19, 20, 26, 37
1632	10, 14, 16, 17, 19, 20, 21, 22, 24, 25, 31, 35, 43, 48, 61, 65
1633	10, 13, 14, 16, 18, 19, 20, 24, 44, 48
1634	13, 14, 15, 16, 18, 19, 20, 21, 22, 23, 35, 62
1635	10, 14, 17, 19, 20, 29, 34
1636	12, 13, 14, 18, 19, 20, 30, 35, 57
1637	13, 14, 18, 19, 20, 21, 23, 35
1638	10, 13, 14, 16, 18, 19, 20, 21, 34, 44
1639	12, 14, 15, 16, 18, 19, 20, 26, 37, 44
1640	23, 28
1641	10, 14, 18, 19, 20, 55
1642	17, 23, 28, 33
1643	10, 13, 14, 15, 17, 19, 20, 21, 31, 34, 43, 44, 48
1644	10, 14, 15, 16, 17, 19, 20, 21, 22, 24, 26, 29, 34, 44, 48, 62
1645	10, 13, 14, 15, 16, 17, 19, 20, 21, 22, 23, 24, 30, 34
1646	21, 22
1647	10, 14, 15, 16, 19, 20, 30, 37
1648	11, 15, 16, 17, 33
1649	10, 14, 15, 16, 17, 19, 20, 21, 22, 31, 34, 43
1650	10, 13, 14, 15, 18, 19, 20, 21, 23, 35, 44, 48
1651	13, 14, 15, 16, 17, 19, 20, 31, 41
1652	10, 13, 14, 19, 20
1653	12, 15, 17
1654	10, 14, 15, 16, 17, 19, 20, 21, 22, 24, 26, 29, 34, 44, 48, 57, 62
1655	10, 15, 16, 17, 21, 22, 33, 44
1656	10, 14, 16, 18, 19, 20, 30, 45, 58
1657	14, 16, 18, 19, 20, 40, 44
1658	10, 14, 15, 16, 18, 19, 20, 26, 37, 55, 62
1659	12, 14, 19, 20
1660	10, 14, 15, 16, 19, 20, 21, 22, 31, 36, 43, 48
1661	10, 14, 15, 19, 20, 34
1662	10, 14, 17, 19, 20, 30, 48
1663	10, 14, 19, 20, 21, 30, 34
1664	10, 14, 19, 20, 21, 34
1665	10, 14, 15, 16, 18, 19, 20, 22, 25, 38, 57, 65
1666	10, 13, 14, 16, 18, 19, 20, 21, 22, 23, 34, 44, 48
1667	10, 13, 14, 15, 18, 19, 20, 21, 35, 44, 48
1668	10, 14, 15, 16, 18, 19, 20, 26, 37, 65
1669	10, 14, 15, 16, 17, 19, 20, 22, 34
1670	10, 14, 18, 19, 20, 34
1671	10, 14, 15, 16, 18, 19, 20, 24, 38, 44, 57
1672	10, 14, 15, 16, 18, 19, 20, 24, 38, 57
1673	10, 14, 15, 17, 19, 20, 31, 34, 44, 48
1674	10, 14, 15, 16, 17, 19, 20, 31, 35, 48, 57, 61
1675	10, 14, 15, 16, 17, 19, 20, 31, 34
1676	10, 13, 14, 16, 18, 19, 20, 21, 34, 44, 48
1677	10, 14, 19, 20, 23, 33
1678	10, 13, 14, 15, 16, 18, 19, 20, 34
1679	10, 14, 16, 18, 19, 20, 21, 31

Code No.	Code Number Singles
1680	10, 13, 14, 16, 18, 19, 20, 21, 44, 65
1681	10, 13, 14, 15, 16, 19, 20, 21, 24, 34
1682	12, 13, 14, 16, 18, 19, 20, 21
1683	10, 14, 15, 16, 19, 20, 24, 38, 57, 65
1684	10, 14, 15, 16, 19, 20, 24, 65
1685	10, 14, 16, 19, 20, 40
1686	10, 13, 14, 15, 16, 17, 19, 20, 30, 34
1687	10, 14, 15, 16, 18, 19, 20, 30, 34
1688	10, 13, 14, 16, 19, 20, 30, 45
1689	10, 13, 14, 16, 17, 19, 20, 31, 34, 44
1690	10, 14, 15, 16, 18, 19, 20
1691	10, 14, 15, 16, 17, 19, 20, 34, 44
1692	10, 14, 15, 16, 19, 20, 24, 38
1693	10, 13, 14, 16, 18, 19, 20, 30, 34
1694	10, 15, 16, 17, 31
1695	10, 13, 14, 16, 18, 19, 20, 21, 31, 35, 43, 44, 48
1696	10, 14, 15, 16, 18, 19, 20, 30, 37, 48
1697	10, 13, 14, 18, 19, 20, 21, 23, 30, 37, 48
1698	10, 13, 14, 16, 18, 19, 20, 21, 22, 34, 43, 44, 48
1699	10, 14, 18, 19, 20, 21, 26, 31, 35, 43, 48, 62
1700	10, 15, 16, 17, 21, 25, 31, 33
1701	10, 16, 17, 19, 21, 28, 33
1702	10, 13, 14, 15, 18, 19, 20, 21, 22, 23, 35, 62
1703	10, 13, 14, 15, 16, 18, 19, 20, 31, 35, 43
1704	10, 13, 14, 18, 19, 20, 21, 23, 30
1705	10, 13, 14, 16, 18, 19, 20, 34
1706	10, 14, 15, 16, 18, 19, 20, 44
1707	12, 15
1708	10, 15, 16, 17, 22, 33, 62
1709	10, 13, 14, 18, 19, 20, 21, 23, 30, 34
1710	12, 13, 14, 16, 18, 19, 20, 21, 57
1711	10, 14, 15, 16, 18, 19, 20, 34
1712	10, 13, 14, 16, 18, 19, 20, 21, 44, 45, 65
1713	10, 14, 15, 16, 17, 19, 20, 30, 34
1714	10, 13, 14, 15, 16, 18, 19, 20, 21, 22, 23, 30, 35, 62
1715	10, 14, 15, 16, 17, 19, 20, 21, 22, 31, 34
1716	10, 14, 16, 18, 19, 20, 21, 23, 30, 35
1717	10, 13, 14, 15, 16, 19, 20, 21, 24, 31, 34
1718	10, 13, 14, 18, 19, 20, 21, 23, 30, 35
1719	10, 14, 15, 18, 19, 20, 30
1720	10, 14, 15, 16, 18, 19, 20, 35
1721	10, 14, 16, 17, 19, 20, 30, 34
1722	10, 13, 14, 15, 18, 19, 20, 21, 23, 30, 34
1723	10, 13, 14, 15, 18, 19, 20, 21, 23, 24
1724	10, 13, 14, 15, 17, 19, 20, 21, 23, 30, 34, 44, 48
1725	10, 13, 14, 15, 17, 19, 20, 31, 34, 43, 44, 48
1726	10, 14, 16, 18, 19, 20, 26, 40
1727	10, 14, 16, 17, 19, 20, 21, 22, 23, 24, 30, 35
1728	10, 14, 15, 16, 18, 19, 20, 23, 30, 35
1729	10, 14, 16, 17, 19, 20, 21, 22, 24, 31, 35, 43, 48, 65
1730	10, 13, 14, 15, 16, 17, 19, 20, 22, 24, 31, 35, 48, 57, 61, 65
1731	10, 14, 15, 16, 17, 19, 20, 22, 24, 30, 35, 57, 61, 62
1732	10, 14, 15, 16, 18, 19, 20, 22, 26, 37, 65
1733	10, 13, 14, 15, 17, 19, 20, 21, 31, 33, 43, 44, 48
1734	10, 14, 15, 16, 17, 19, 20, 22, 24, 35, 48, 57, 61, 62, 65
1735	10, 14, 15, 16, 17, 19, 20, 22, 24, 31, 35, 48, 57, 61, 62, 65
1736	15, 30
1737	10, 14, 15, 16, 17, 19, 20, 22, 24, 34, 56
1738	10, 16, 22, 67, 68, 70, 73
1739	10, 16, 21, 67, 68, 70, 73
1740	10, 16, 67, 68, 70, 73
1741	10, 16, 19, 21, 67, 68, 70, 73
1742	10, 16, 31, 67, 68, 70, 73
1743	10, 13, 14, 15, 16, 17, 19, 20, 34
1744	10, 14, 19, 20, 30, 33
1745	10, 13, 14, 15, 16, 17, 19, 20, 21, 22, 31, 34, 43
1746	10, 14, 15, 16, 17, 19, 20, 22, 23, 24, 34, 52
1747	10, 13, 14, 15, 16, 17, 19, 20, 21, 22, 25, 31, 34, 43
1748	10, 13, 16, 32, 67, 68, 70, 73
1749	10, 16, 21, 22, 67, 68, 70, 73
1750	10, 16, 21, 22, 62, 67, 68, 70, 73
1751	12, 16, 70, 73
1752	10, 14, 16, 17, 19, 20, 21, 30, 35
1753	10, 14, 15, 16, 17, 19, 20, 24, 30, 34
1754	10, 13, 14, 15, 16, 18, 19, 20, 30, 35
1755	10, 13, 14, 15, 16, 18, 19, 20, 30, 34
1756	10, 14, 15, 16, 18, 19, 20, 22, 24, 25, 30, 38, 57
1757	10, 13, 14, 15, 17, 19, 20, 21, 31, 34, 43, 44, 48, 65

†Revised Information. Issue 2

Special Fitments Code—*continued*

Code No.	Code Number Singles
1758	10, 13, 14, 16, 18, 19, 20, 21, 22, 23, 34, 44, 48, 65
1759	10, 14, 15, 16, 18, 19, 20, 22, 24, 25, 38, 57, 65
1760	10, 14, 15, 16, 17, 21, 25, 33
1761	16, 70, 73
1762	10, 13, 16, 22, 32, 67, 68, 70, 73
1763	10, 16, 28, 67, 68, 70, 73
1764	10, 16, 19, 21, 22, 28, 67, 68, 70, 73
1765	10, 16, 19, 21, 22, 23, 67, 68, 70, 73
1766	14, 15, 30
1767	10, 16, 21, 22, 23, 62, 67, 68, 70, 73
1768	10, 13, 16, 22, 23, 32, 62, 67, 68, 70, 73
1769	10, 13, 14, 18, 19, 20, 23, 30, 34, 62
1770	10, 14, 18, 19, 20, 23, 30, 35
1771	10, 13, 14, 15, 17, 19, 20, 21, 25, 34
1772	10, 14, 15, 17, 19, 20, 35
1773	10, 14, 16, 67, 68, 70, 73
1774	10, 16, 21, 42, 67, 68, 70, 73
1775	10, 13, 16, 19, 20, 21, 22, 31, 43, 48, 62, 70, 73
1776	12, 14, 16, 18, 19, 20, 30, 37
1777	10, 16, 19, 20, 65, 71, 73
1778	10, 16, 17, 19, 20, 31, 70, 73
1779	10, 16, 19, 20, 22, 25, 31, 43
1780	14, 16, 18, 19, 20, 21, 30, 40
1781	10, 14, 18, 19, 20, 21, 34
1782	10, 16, 19, 21, 22, 67, 68, 70, 73
1783	10, 14, 15, 16, 17, 19, 20, 21, 23, 31, 34, 65
1784	10, 16, 21, 23, 67, 68, 70, 73
1785	10, 16, 22, 31, 67, 68, 70, 73
1786	10, 16, 21, 22, 28, 44, 67, 68, 70, 73
1787	10, 13, 14, 18, 19, 20, 31, 35, 65
1788	10, 16, 21, 31, 67, 68, 70, 73
1789	10, 13, 16, 21, 32, 67, 68, 70, 73
1790	10, 16, 22, 30, 67, 68, 70, 73
1791	10, 13, 16, 21, 22, 30, 32, 67, 68, 70, 73
1792	13, 16, 17, 19, 20, 31, 70, 78
1793	10, 13, 16, 17, 19, 20, 31, 70, 78
1794	10, 16, 17, 19, 20, 28, 70, 78
1795	10, 13, 16, 17, 19, 20, 70, 73
1796	10, 16, 17, 19, 20, 70, 73
1797	10, 14, 15, 16, 17, 28, 33
1798	10, 16, 19, 20, 71, 73
1799	10, 16, 19, 20, 22, 24, 31, 70, 73
1800	10, 16, 19, 20, 22, 31, 70, 73
1801	10, 13, 16, 19, 20, 22, 31, 70, 73
1802	10, 13, 16, 19, 20, 22, 24
1803	10, 16, 17, 19, 20, 22, 24, 31, 70, 73
1804	10, 13, 16, 22, 32, 62, 67, 68, 70, 73
1805	10, 13, 16, 19, 22, 32, 67, 68, 70, 73
1806	10, 13, 16, 31, 67, 68, 70, 73
1807	10, 13, 16, 17, 19, 20, 22, 24, 31, 70, 73
1808	10, 13, 14, 15, 18, 19, 20, 21, 23, 35, 48, 65
1809	10, 13, 14, 18, 19, 20, 21, 23, 35, 65
1810	10, 13, 16, 17, 19, 20, 22, 31, 70, 73
1811	10, 16, 19, 67, 68, 70, 73
1812	10, 16, 17, 19, 20, 22, 24, 31, 48, 57, 61, 62, 65, 70, 73
1813	10, 13, 16, 17, 19, 20, 22, 24, 48, 57, 61, 62, 65, 70, 73
1814	10, 13, 16, 17, 19, 20, 22, 24, 31, 48, 57, 61, 62, 65, 70, 73
1815	10, 16, 17, 19, 20, 22, 24, 57, 62, 65, 70, 73
1816	10, 16, 17, 19, 20, 22, 24, 48, 57, 61, 62, 65, 70, 73
1817	10, 13, 16, 17, 19, 20, 22, 24, 57, 62, 65, 70, 73
1818	10, 16, 19, 20, 62, 65, 71, 73
1819	10, 16, 19, 22, 67, 68, 70, 73
1820	10, 13, 16, 19, 32, 67, 68, 70, 73
1821	10, 14, 15, 18, 19, 20, 24, 30, 38, 57
1822	14, 15, 16, 17, 19, 20, 30, 34
1823	10, 14, 15, 16, 18, 19, 20, 24, 25, 30, 38, 57
1824	10, 16, 19, 20, 65, 70, 73
1825	10, 16, 19, 20, 44, 65, 70, 73
1826	10, 13, 16, 19, 20, 65, 70, 73
1827	10, 19, 20, 70, 73
1828	10, 16, 19, 20, 22, 70, 73
1829	10, 17, 19, 20, 31, 70, 73
1830	10, 17, 19, 20, 65, 70, 73
1831	10, 16, 17, 19, 20, 22, 31, 70, 73
1832	10, 13, 19, 20, 31, 65, 70, 73
1833	10, 16, 19, 20, 70, 73
1834	10, 13, 16, 19, 20, 22, 70, 73
1835	10, 16, 17, 19, 20, 22, 31, 70, 73
1836	10, 13, 16, 17, 19, 20, 31, 70, 73
1837	10, 13, 16, 19, 20, 22, 65, 70, 73
1838	10, 19, 20, 25, 70, 73
1839	10, 16, 17, 19, 20, 65, 70, 73
1840	10, 13, 17, 19, 20, 70, 73
1841	10, 13, 16, 19, 20, 21, 22, 23, 24, 65, 70, 73
1842	10, 16, 17, 19, 20, 21, 22, 70, 73
1843	10, 17, 19, 20, 21, 22, 70, 73
1844	10, 19, 20
1845	10, 16, 17, 19, 20, 31, 70, 78
1846	10, 16, 19, 20, 21, 22, 44, 70, 73
1847	10, 16, 17, 19, 20, 21, 23, 24, 70, 73
1848	10, 13, 16, 19, 20, 70, 73
1849	10, 13, 16, 19, 20, 21, 70, 73
1850	10, 13, 16, 17, 19, 20, 22, 24, 31, 52, 70, 73
1851	10, 16, 17, 19, 25, 67, 68, 70, 73
1852	12, 16, 19, 20, 21, 22, 44, 70, 73
1853	10, 13, 16, 19, 20, 55, 65, 70, 73
1854	15, 25, 44
1855	10, 16, 19, 20, 24, 27, 70, 73
1856	10, 16, 19, 20, 21, 23, 70, 73
1857	10, 13, 16, 17, 19, 20, 22, 31, 43, 70, 73
1858	10, 16, 19, 20, 31, 70, 73
1859	10, 16, 19, 20, 21, 31, 43, 70, 73
†1860	10, 13, 16, 17, 19, 20, 31, 59, 70, 78
†1861	12, 13, 16, 17, 19, 20, 31, 70, 78
†1862	16, 19, 20, 25, 29, 44, 57, 65, 70, 73
†1863	16, 19, 20, 25, 44, 57, 65, 70, 73
†1864	10, 16, 19, 20, 22, 24, 25, 57, 65, 70, 73
†1865	16, 19, 20, 24, 25, 44, 57, 65, 70, 73
†1866	12, 16, 19, 20, 22, 24, 25, 57, 65, 70, 73
†1867	10, 13, 16, 19, 20, 50, 70, 73
†1868	10, 14, 15, 18, 19, 20, 21, 23, 35, 48
†1869	10, 16, 70, 73
†1870	10, 16, 19, 20, 31, 71, 73
†1871	10, 16, 17, 19, 20, 21, 22, 44, 70, 73
†1872	12, 16, 17, 19, 20, 21, 22, 44, 70, 73
†1873	10, 13, 19, 20, 31, 70, 73
†1874	10, 13, 14, 18, 19, 20, 21, 23, 25, 35
†1875	10, 13, 14, 15, 16, 18, 19, 20, 21, 23, 34, 44, 48
†1876	10, 14, 15, 16, 18, 19, 20, 24, 25, 29, 30, 38, 57
†1877	10, 13, 14, 15, 18, 19, 20, 21, 22, 23, 25, 35, 44, 65
†1878	10, 13, 16, 17, 19, 20, 22, 24, 52, 70, 73, 74
†1879	16, 17, 19, 20, 31, 70, 78
†1880	10, 16, 19, 20, 21, 22, 31, 43, 70, 73
†1881	10, 13, 16, 19, 20, 31, 43, 70, 73
†1882	10, 13, 16, 19, 20, 21, 62, 70, 73
†1883	10, 16, 21, 22, 23, 67, 68, 70, 73
†1884	10, 13, 16, 19, 21, 22, 23, 32, 67, 68, 70, 73
†1885	10, 19, 20, 21, 23, 48, 62, 70, 73
†1886	10, 13, 16, 19, 20, 21, 22, 23, 62, 70, 73
†1887	16, 19, 20, 21, 22, 25, 44, 70, 73
†1888	12, 16, 19, 20, 22, 70, 73
†1889	12, 16, 19, 20, 21, 22, 70, 73
†1890	10, 19, 20, 21, 22, 31, 43, 44, 71, 73
†1891	10, 17, 19, 20, 70, 73
†1892	16, 19, 20, 21, 22, 70, 73
†1893	10, 20
†1894	10, 13, 16, 17, 19, 20, 22, 52, 70, 73, 74
†1895	10, 13, 20
†1896	10, 13, 16, 19, 20, 65, 71, 73
†1897	10, 16, 19, 20, 21, 31, 42, 56, 70, 73
†1898	16, 19, 20, 22, 70, 73
†1899	10, 13, 16, 19, 20, 22, 24, 25, 44, 57, 65, 70 73
†1900	16, 19, 20, 22, 44, 70, 73
†1901	10, 13, 16, 19, 20, 58, 65, 70
†1902	10, 13, 19, 20, 22, 25, 31, 43, 44, 62, 65, 70 73
†1903	10, 16, 19, 20 21, 22, 23, 48, 65, 72, 73
†1904	10, 13, 16 19, 20, 22, 24, 57, 65, 70, 73
†1905	10, 13, 16, 21, 22, 25, 32, 67, 68, 69, 70, 73
†1906	10, 13, 16, 17, 19, 20, 22, 70, 73 74
†1907	10, 13, 16, 19, 20 21, 57, 72, 73
†1908	10, 16, 19, 20, 21, 57, 72, 73

†Revised Information. Issue 2

Special Fitments Code—*continued*

Code No.	Code Number Singles
†1909	10, 13, 16, 19, 20, 31, 71, 73
†1910	10, 13, 16, 19, 20, 71, 73
†1911	10, 16, 19, 20, 55, 65, 70, 73
†1912	12, 16, 19, 20, 25, 31, 44, 57, 72, 73
†1913	10, 16, 19, 20, 31, 57, 72, 73
†1914	10, 16, 19, 20, 21, 23, 57, 72, 73
†1915	10, 13, 16, 17, 19, 20, 22, 24, 25, 43, 52, 70, 73, 74
†1916	10, 16, 17, 19, 20, 22, 24, 31, 52, 70, 73
†1917	10, 13, 16, 17, 19, 20, 22, 25, 31, 43, 62, 70, 73
†1918	10, 16, 17, 19, 20, 22, 24, 70, 73
†1919	10, 13, 16, 19, 20, 22, 23, 24, 48, 70, 73
†1920	10, 16, 19, 20, 22, 23, 24, 48, 70, 73
†1921	10, 14, 15, 16, 17, 19, 20, 22, 34, 48
†1922	10, 16, 19, 20, 21, 31, 57, 72, 73
†1923	12, 70, 73
†1924	10, 13, 14, 19, 20, 31, 44
†1925	10, 13, 16, 19, 20, 21, 23, 57, 72, 73
†1926	10, 16, 19, 20, 22, 24, 57, 65, 70, 73
†1927	10, 16, 19, 20, 24, 57, 65, 70, 73
†1928	10, 19, 20, 21, 70, 73
†1929	10, 17, 19, 20, 21, 70, 73
†1930	10, 16, 19, 20, 57, 72, 73
†1931	10, 13, 16, 19, 20, 21, 22, 23, 48, 62, 70, 73
†1932	10, 16, 17, 19, 20, 22, 24, 25, 31, 52, 56, 70, 73
†1933	10, 13, 16, 19, 20, 22, 24, 25, 57, 65, 70, 73
†1934	10, 13, 16, 19, 21, 22, 32, 67, 68, 70, 73
†1935	10, 14, 15, 16, 19, 20, 22, 26
†1936	10, 14, 15, 16, 19, 20, 26, 31
†1937	10, 13, 16, 32, 62, 67, 68, 70, 73
†1938	10, 16, 23, 67, 68, 70, 73
†1939	17, 19, 20, 21, 31, 43, 44, 48, 70, 73
†1940	16, 19, 20, 44, 65, 70, 73
†1941	10, 13, 16, 17, 19, 20, 21, 70, 73
†1942	10, 16, 19, 20, 21, 22, 23, 48, 62, 70, 73
†1943	12, 16, 55, 67, 68, 70, 73
†1944	10, 16, 25, 31, 67
†1945	10, 16, 22, 62, 67, 68, 70, 73
†1946	13, 16, 17, 19, 20, 21, 70, 73
†1947	25, 44
†1948	10, 16, 19, 20, 57, 62, 72, 73
†1949	12, 16, 19, 20, 24, 25, 44, 57, 65, 70, 73
†1950	16, 19, 20, 21, 22, 44, 70, 73
†1951	10, 16, 19, 20, 71, 73, 74
†1952	10, 16, 17, 19, 20, 22, 70, 73
†1953	10, 16, 19, 20, 24, 25, 57, 65, 70, 73
†1954	10, 16, 17, 19, 20, 22, 31, 56, 70, 73
†1955	10, 19, 20, 21, 48, 70, 73
†1956	10, 16, 17, 19, 20, 22, 60, 70, 73
†1957	10, 13, 16, 22, 67, 68, 70, 73
†1958	10, 16, 17, 19, 20, 23, 62, 70, 73
†1959	10, 13, 19, 20, 21, 22, 23, 70, 73
†1960	10, 13, 16, 19, 21, 32, 67, 68, 70, 73
†1961	10, 16, 21, 31, 42, 67, 68, 70, 73
†1962	10, 16, 21, 22, 31, 67, 68, 70, 73
†1963	10, 16, 22, 44, 67, 68, 70, 73
†1964	12, 16, 65, 70, 73
†1965	10, 13, 20, 27
†1966	10, 20, 27
†1967	10, 16, 17, 19, 20, 22, 70, 73, 74
†1968	16, 17, 19, 20, 44, 65, 70, 73
†1969	12, 16, 19, 20, 65, 71, 73
†1970	10, 13, 16, 17, 19, 20, 22, 24, 25, 52, 70, 73, 74
†1971	10, 16, 17, 19, 20, 22, 24, 25, 52, 70, 73, 74
†1972	10, 13, 19, 20, 21, 23, 70, 73
†1973	10, 13, 16, 19, 20, 57, 62, 72, 73
†1974	10, 16, 17, 19, 20, 22, 25, 70, 73, 74
†1975	10, 13, 19, 20, 21, 24, 31, 43, 48, 62, 70, 73
†1976	10, 19, 20, 21, 24, 48, 70, 73
†1977	10, 16, 19, 20, 22, 24, 25, 44, 57, 65, 70, 73
†1978	10, 16, 19, 20, 22, 24, 25, 57, 62, 65, 70, 73
†1979	10, 13, 16, 19, 20, 21, 22, 31, 43, 70, 73
†1980	10, 13, 16, 17, 19, 20, 22, 24, 70, 73
†1981	10, 13, 16, 19, 20, 21, 23, 70, 73
†1982	10, 13, 19, 20, 21, 48, 55, 70, 73
†1983	10, 16, 19, 20, 24, 25, 27, 70, 73
†1984	10, 17, 19, 20, 48, 70, 73
†1985	10, 19, 20, 25
†1986	10, 13, 19, 20
†1987	10, 16, 17, 19, 20, 24, 25, 44, 65, 70, 73
†1988	10, 13, 19, 20, 65, 70, 73
†1989	10, 13, 19, 20, 70, 73
†1990	10, 16, 21, 25, 31, 42, 67, 68, 69, 70, 73
†1991	10, 19, 20, 57, 72, 73
†1992	12, 16, 19, 20, 71, 73
†1993	10, 19, 20, 21, 23, 57, 72, 73
†1994	10, 19, 20, 21, 31, 43, 48, 62, 71, 73
†1995	16, 19, 20, 22, 44, 70, 73
†1996	10, 19, 20, 31, 57, 72, 73
†1997	12, 19, 20, 25, 31, 44, 57, 72, 73
†1998	25, 44, 69
†1999	19, 44, 70, 73
†2000	10, 13, 16, 17, 19, 20, 25, 31, 70, 78
†2001	10, 13, 16, 17, 19, 20, 70, 78
†2002	10, 16, 19, 20, 24, 70, 73
†2003	10, 16, 19, 20, 24, 25, 70, 73
†2004	10, 16, 19, 20, 22, 24, 57, 62, 65, 70, 73
†2005	12, 16, 17, 19, 20, 31, 70, 78
†2006	10, 13, 16, 17, 19, 20, 22, 25, 31, 43, 70, 73
†2007	10, 16, 17, 19, 20, 21, 48, 70, 73
†2008	10, 13, 16, 19, 20, 21, 31, 43, 70, 73
†2009	16, 19, 20, 65, 70, 73
†2010	10, 16, 19, 20, 22, 24, 43, 52, 70, 73, 74
†2011	10, 16, 17, 19, 20, 21, 23, 62, 70, 73
†2012	10, 13, 16, 17, 19, 20, 21, 48, 70, 73
†2013	10, 17, 19, 20, 29, 48, 70, 73
†2014	10, 16, 24, 67, 68, 70, 73
†2015	10, 13, 16, 31, 32, 42, 67, 68, 70, 73
†2016	10, 16, 62, 67, 68, 70, 73
†2017	10, 16, 25, 28, 67, 68, 69, 70, 73
†2018	10, 13, 16, 19, 21, 32, 55, 67, 68, 70, 73
†2019	10, 13, 16, 32, 55, 67, 68, 70, 73
†2020	12, 16, 17, 19, 20, 22, 24, 42, 70, 73, 74
†2021	10, 13, 16, 19, 20, 21, 44, 48, 70, 73
†2022	10, 17, 19, 20, 31, 43, 48, 62, 70, 73
†2023	10, 13, 17, 19, 20, 21, 23, 44, 48, 70, 73
†2024	10, 19, 20, 22, 57, 72, 73
†2025	10, 13, 19, 20, 22, 57, 72, 73
†2026	10, 19, 20, 21, 22, 23, 57, 72, 73
†2027	10, 19, 20, 22, 31, 57, 72, 73
†2028	10, 16, 19, 20, 44, 55, 65, 70, 73
†2029	10, 16, 19, 20, 22, 24, 25, 44, 57, 62, 65, 70, 73
†2030	10, 16, 19, 20, 22, 24, 25, 65, 70, 73
†2031	16, 19, 20, 21, 31, 43, 70, 73
†2032	10, 13, 19, 20, 23, 24, 57, 70, 73
†2033	10, 16, 17, 19, 20, 22, 23, 24, 70, 73
†2034	10, 13, 19, 20, 57, 70, 73
†2035	10, 19, 20, 21, 22, 31, 57, 72, 73
†2036	12, 16, 19, 20, 31, 71, 73
†2037	10, 19, 20, 21, 22, 57, 72, 73
†2038	10, 16, 17, 19, 20, 22, 23, 24, 25, 70, 73
†2039	10, 13, 16, 22, 31, 32, 67, 68, 70, 73
†2040	10, 16, 19, 44, 67, 68, 70, 73
†2041	10, 13, 17, 19, 20, 21, 23, 48, 70, 73
†2042	10, 13, 16, 17, 19, 20, 22, 24, 57, 61, 62, 65, 70, 73
†2043	10, 16, 17, 19, 20, 22, 24, 57, 61, 62, 65, 70, 73
†2044	10, 16, 19, 21, 25, 67, 68, 69, 70, 73
†2045	10, 16, 17, 19, 20, 21, 22, 24, 31, 48, 57, 61, 62, 65, 70, 73
†2046	12, 16, 17, 19, 20, 22, 31, 70, 73
†2047	10, 16, 17, 19, 20, 21, 23, 25
†2048	10, 13, 16, 19, 20, 21, 22, 23, 44, 48, 70, 73
†2049	10, 16, 19, 20, 21, 22, 23, 44, 48, 70, 73
†2050	10, 19, 20, 21, 65, 71, 73
†2051	10, 19, 20, 21, 23, 48, 70, 73
†2052	10, 13, 19, 20, 21, 48, 70, 73
†2053	16, 19, 20, 22, 25, 44, 70, 73
†2054	10, 19, 20, 21, 22, 31, 43, 57, 72, 73
†2055	10, 13, 16, 31, 67, 68, 70, 73
†2056	10, 16, 55, 67, 68, 70, 73
†2057	10, 13, 17, 19, 20, 21, 70, 73
†2058	10, 16, 19, 20, 22, 25, 70, 73
†2059	10, 16, 19, 20, 21, 22, 23, 48, 70, 73
†2060	10, 13, 16, 21, 32, 55, 67, 68, 70, 73

†Revised Information. Issue 2

Special Fitments Code–*continued*

Code No.	Code Number Singles
†2061	10, 13, 16, 19, 20, 21, 57, 70, 73
†2062	10, 13, 16, 19, 20, 57, 70, 73
†2063	10, 13, 16, 19, 20, 21, 22, 25, 31, 43, 44, 48, 70, 73
†2064	10, 13, 16, 17, 19, 20, 22, 43, 70, 73, 74
†2065	10, 16, 17, 19, 20, 22, 23, 24, 25, 52, 70, 73
†2066	10, 13, 16, 17, 19, 20, 22, 24, 31, 43, 52, 70, 73
†2067	10, 13, 16, 19, 20, 44, 62, 65, 70, 73
†2068	10, 13, 16, 17, 19, 20, 22, 25, 43, 70, 73, 74
†2069	10, 13, 16, 17, 19, 20, 22, 23, 24, 70, 73
†2070	16, 19, 20, 71, 73
†2071	10, 13, 17, 19, 20, 21, 31, 43, 44, 48, 70, 73
†2072	23, 28, 44, 70, 73
†2073	10, 13, 16, 19, 20, 23, 70, 73
†2074	16, 23, 28, 44, 70, 73
†2075	21, 70, 73
†2076	16, 28, 70, 73
†2077	10, 16, 22, 23, 67, 68, 70, 73
†2078	10, 16, 22, 25, 67, 68, 69, 70, 73
†2079	10, 13, 16, 19, 20, 21, 65, 71, 73
†2080	10, 16, 19, 31, 67, 68, 70, 73
†2081	70, 73
†2082	10, 16, 17, 19, 20, 21, 22, 48, 61, 70, 73
†2083	10, 13, 17, 19, 20, 21, 22, 31, 43, 62, 70, 73, 86
†2084	10, 13, 17, 19, 20, 48, 70, 73
†2085	10, 13, 17, 19, 20, 21, 22, 23, 62, 70, 73, 86
†2086	10, 16, 19, 20, 57, 71, 73
†2087	10, 16, 17, 19, 20, 21, 22, 48, 70, 73
†2088	10, 16, 17, 19, 20, 22, 44, 70, 73, 74
†2089	10, 16, 19, 20, 21, 22, 31, 42, 57, 72, 73
†2090	10, 19, 20, 21, 22, 31, 42, 57, 72, 73
†2091	10, 13, 16, 21, 22, 32, 62, 67, 68, 70, 73
†2092	10, 13, 16, 21, 22, 23, 32, 62, 67, 68, 70, 73
†2093	10, 13, 16, 28, 32, 67, 68, 70, 73
†2094	13, 21, 32
†2095	12, 16, 70, 73
†2096	10, 16, 44, 67, 68, 70, 73
†2097	10, 13, 19, 20, 71, 73, 86
†2098	10, 16, 19, 20, 21, 22, 24, 48, 65, 70, 73
†2099	10, 16, 19, 20, 21, 22, 23, 24, 48, 62, 65, 70, 73
†2100	10, 13, 16, 19, 20, 21, 22, 31, 43, 48, 72, 73
†2101	10, 13, 16, 19, 20, 21, 23, 62, 70, 73
†2102	10, 13, 16, 19, 20, 57, 65, 71, 73
†2103	10, 16, 19, 20, 21, 57, 65, 71, 73
†2104	10, 13, 16, 19, 20, 22, 25, 31, 43, 44, 48, 70, 73
†2105	10, 16, 19, 20, 21, 24, 31, 48, 70, 73
†2106	10, 16, 19, 20, 21, 24, 31, 43, 70, 73
†2107	10, 16, 19, 20, 21, 22, 24, 31, 43, 61, 62, 65, 70, 73
†2108	10, 16, 19, 20, 21, 24, 48, 70, 73
†2109	10, 16, 17, 19, 20, 25, 31, 44, 70, 73
†2110	16, 17, 19, 20, 44, 70, 73
†2111	16, 17, 19, 20, 44, 70, 73, 74
†2112	10, 16, 17, 19, 20, 22, 23, 24, 52, 70, 73
†2113	10, 16, 19, 20, 23, 24, 57, 65, 70, 73
†2114	10, 16, 19, 20, 21, 48, 70, 73
†2115	16, 19, 20, 24, 25, 57, 65, 70, 73
†2116	10, 13, 16, 19, 20, 21, 23, 25, 44, 70, 73
†2117	10, 13, 19, 20, 21, 70, 73
†2118	10, 16, 17, 19, 20, 22, 31, 43, 70, 73
†2119	10, 16, 17, 19, 20, 21, 22, 24, 31, 43, 48, 61, 62, 70, 73
†2200	10, 22, 25, 67, 68, 69, 70, 73
†2201	10, 13, 22, 32, 67, 68, 70, 73
†2202	10, 16, 17, 19, 20, 22, 25, 31, 43, 70, 73
†2203	10, 16, 17, 19, 20, 21, 22, 24, 48, 65, 70, 73
†2204	10, 16, 17, 19, 20, 21, 22, 23, 24, 48, 62, 65, 70, 73
†2205	10, 16, 17, 19, 20, 21, 22, 24, 31, 43, 61, 62, 65, 70, 73
†2206	10, 19, 20, 65, 71, 73
†2207	25, 44, 65, 69
†2208	10, 16, 19, 20, 22, 65, 71, 73
†2209	10, 16, 17, 19, 20, 21, 70, 73
†2210	10, 16, 17, 19, 20, 21, 22, 24, 31, 43, 48, 61, 62, 65, 70, 73
†2211	10, 19, 20, 21, 22, 72, 73
†2212	10, 16, 19, 20, 22, 23, 24, 25, 57, 65, 70, 73
†2213	16, 19, 20, 44, 70, 73
†2214	10, 13, 16, 17, 19, 20, 22, 70, 73
†2215	10, 16, 17, 19, 20, 21, 22, 23, 24, 48, 62, 70, 73
†2216	10, 19, 20, 23
†2217	10, 19, 20, 21, 22, 23, 70, 73
†2218	10, 13, 16, 17, 19, 20, 22, 24, 25, 31, 43, 70, 73
†2219	10, 13, 16, 17, 19, 20, 21, 22, 24, 31, 43, 48, 61, 62, 70, 73
†2220	27, 28
†2221	12, 13, 16, 19, 32, 67, 68, 70, 73
†2222	10, 16, 25, 67, 68, 69, 70, 73
†2223	10, 19, 20, 21, 22, 24, 31, 43, 48, 61, 65, 70, 73
†2224	10, 19, 20, 23, 57
†2225	10, 13, 16, 19, 20, 21, 22, 24, 31, 41, 48, 61, 65, 70, 73
†2226	16, 19, 20, 25, 44, 65, 70, 73
†2227	10, 13, 16, 19, 20, 21, 22, 23, 24, 48, 62, 70, 73
†2228	10, 16, 19, 20, 21, 22, 23, 24, 48, 62, 70, 73
†2229	12, 13, 16, 17, 19, 20, 22, 25, 31, 70, 73
†2230	10, 16, 19, 20, 21, 31, 43, 44, 70, 73
†2231	10, 13, 19, 20, 21, 31, 43, 44, 48, 70, 73
†2232	10, 16, 19, 20, 21, 24, 57, 65, 70, 73
†2233	12, 20, 25
†2234	10, 13, 16, 19, 20, 70, 78
†2235	10, 13, 16, 21, 22, 31, 32, 67, 68, 70, 73
†2236	12, 16, 19, 21, 44, 70, 73
†2237	10, 16, 19, 20, 23, 62, 70, 73
†2238	19, 20, 57, 70, 73
†2239	10, 13, 19, 20, 65, 71, 73, 86
†2240	10, 16, 19, 20, 21, 22, 24, 44, 70, 73
†2241	10, 13, 16, 17, 19, 20, 21, 22, 24, 31, 43, 70, 73
†2242	10, 13, 16, 17, 19, 20, 21, 22, 23, 24, 48, 62, 70, 73
†2243	10, 17, 19, 20, 21, 22, 24, 31, 43, 48, 61, 65, 70, 73
†2244	10, 13, 16, 17, 19, 20, 21, 22, 24, 31, 43, 48, 61, 65, 70, 73
†2245	10, 13, 16, 17, 19, 20, 22, 24, 25, 31, 42, 70, 73
†2246	10, 16, 19, 20, 25, 44, 65, 70, 73
†2247	10, 16, 19, 23, 25, 67, 68, 69, 70, 73
†2248	10, 13, 16, 17, 19, 20, 22, 24, 25, 31, 52, 70, 73
†2249	10, 13, 16, 17, 19, 20, 22, 25, 70, 73
†2250	10, 13, 16, 17, 19, 20, 21, 22, 23, 24, 70, 73
†2251	10, 13, 19, 20, 22, 31, 57, 72, 73
†2252	10, 13, 19, 20, 23, 70, 73
†2253	10, 13, 16, 19, 20, 21, 57, 62, 70, 73
†2254	10, 13, 14, 20, 30
†2255	12, 14, 20, 30
†2256	10, 14, 20, 30
†2257	10, 16, 19, 20, 22, 28, 63
†2258	10, 16, 19, 20, 22, 23, 48, 70, 73
†2259	10, 13, 16, 19, 20, 21, 23, 57, 62, 70, 73
†2260	10, 16, 17, 19, 20, 22, 23, 24, 48, 57, 61, 62, 65, 70, 73
†2261	16, 31, 67, 68, 70, 73, 75
†2262	16, 67, 68, 70, 73, 75
†2263	16, 22, 62, 67, 68, 70, 73, 75
†2264	16, 21, 22, 23, 67, 68, 70, 73, 75
†2265	16, 21, 22, 67, 68, 70, 73
†2266	12, 19, 20, 65, 71, 73, 86
†2267	10, 16, 18, 19, 20, 24, 25, 44, 70, 73
†2268	16, 19, 23, 25, 67, 68, 69, 70, 73, 75
†2269	10, 16, 17, 19, 20, 21, 22, 31, 43, 70, 73
†2270	16, 17, 19, 20, 22, 31, 70, 73
†2271	16, 17, 19, 20, 22, 25, 31, 56, 70, 73
†2272	16, 17, 19, 20, 31, 44, 70, 73
†2273	16, 19, 23, 44, 70, 73
†2274	12, 16, 25, 44, 69, 70, 73
†2275	10, 16, 19, 20, 21, 22, 31, 42, 70, 73
†2276	10, 16, 17, 19, 20, 22, 25, 31, 70, 73
†2277	10, 13, 16, 17, 19, 20, 22, 25, 31, 70, 73
†2278	10, 16, 17, 19, 20, 22, 24, 52, 70, 73, 74

†Revised Information. Issue 2

Special Fitments Code–*continued*

Code No.	Code Number Singles
†2279	16, 17, 19, 20, 22, 70, 73
†2280	16, 17, 19, 20, 21, 44, 48, 70, 73
†2281	10, 16, 19, 20, 22, 24, 65, 70, 73
†2282	10, 16, 19, 20, 22, 24, 25, 44, 65, 70, 73
†2283	10, 13, 19, 20, 21, 31, 44, 48, 70, 73
†2284	12, 20
†2285	10, 16, 19, 25, 28, 67, 68, 69, 70, 73
†2286	10, 16, 19, 20, 22, 44, 57, 65, 70, 73
†2287	10, 16, 19, 20, 22, 62, 70, 73
†2288	10, 13, 17, 19, 20, 31, 44, 48, 70, 73
†2289	12, 19, 20
†2290	10, 16, 17, 19, 20, 21, 23, 70, 73
†2291	10, 16, 17, 19, 20, 22, 24, 31, 56, 70, 73
†2292	10, 19, 20, 65, 71, 73, 86
†2293	10, 13, 17, 19, 20, 21, 31, 44, 48, 70, 73
†2294	10, 16, 17, 19, 20, 21, 22, 24, 57, 65, 70, 73
†2295	10, 13, 16, 17, 19, 20, 21, 23, 70, 73
†2296	10, 14, 16, 19, 20, 30, 33
†2297	16, 19, 20, 44, 57, 65, 70, 73
†2298	19, 25, 69, 70, 73
†2299	10, 13, 20, 25
†2300	10, 13, 16, 19, 20, 21, 31, 43, 44, 48, 70, 73
†2301	10, 19, 20, 29
†2302	16, 17, 19, 20, 21, 22, 70, 73, 75
†2303	16, 17, 19, 20, 21, 23, 70, 73, 75
†2304	10, 16, 19, 20, 31, 43, 62, 70, 73
†2305	10, 13, 16, 17, 19, 20, 21, 22, 25, 70, 73, 74
†2306	10, 16, 19, 20, 21, 31, 43, 70, 73
†2307	10, 13, 17, 19, 20, 22, 24, 31, 43, 48, 57, 62, 65, 70, 73, 86
†2308	10, 19, 20, 22, 65, 71, 73, 86
†2309	10, 13, 17, 19, 20, 22, 24, 57, 62, 65, 70, 73, 86
†2310	11, 19, 20, 23, 48, 72, 73
†2311	10, 19, 20, 31, 70, 73
†2312	16, 17, 19, 20, 22, 24, 25, 31, 70, 73, 75
†2313	17, 19, 20, 70, 73, 75
†2314	16, 17, 19, 20, 22, 31, 43, 70, 73, 75
†2315	16, 17, 19, 20, 22, 24, 52, 70, 73, 74, 75
†2316	13, 16, 17, 19, 20, 22, 24, 52, 70, 73, 74, 75
†2317	19, 20, 21, 70, 73, 75
†2318	17, 19, 20, 22, 24, 31, 48, 57, 62, 65, 70, 73, 75, 86
†2319	13, 17, 19, 20, 22, 24, 31, 43, 48, 57, 62, 65, 70, 73, 75, 86
†2320	17, 19, 20, 22, 24, 48, 57, 61, 62, 65, 70, 73, 75, 86
†2321	13, 16, 17, 19, 20, 21, 22, 24, 31, 43, 70, 73, 75
†2322	13, 19, 20, 21, 23, 70, 73, 75
†2323	13, 19, 20, 21, 31, 43, 44, 48, 70, 73, 75
†2324	13, 16, 19, 20, 22, 24, 57, 65, 70, 73, 75
†2325	16, 19, 20, 65, 70, 73, 75
†2326	19, 20, 65, 71, 73, 75, 86
†2327	13, 16, 19, 20, 21, 23, 62, 70, 73, 75
†2328	13, 16, 19, 20, 22, 62, 70, 73, 75
†2329	16, 19, 20, 22, 25, 70, 73, 75
†2330	16, 19, 20, 71, 73, 75
†2331	13, 16, 19, 20, 57, 70, 73, 75
†2332	13, 17, 19, 20, 22, 24, 57, 62, 65, 70, 73, 75, 86
†2333	16, 19, 20, 24, 57, 65, 70, 73, 75
†2334	13, 16, 17, 19, 20, 21, 22, 23, 24, 70, 73, 75
†2335	10, 22, 62, 67, 68, 70, 73, 86
†2336	10, 21, 22, 23, 67, 68, 70, 73, 86
†2337	10, 21, 22, 67, 68, 70, 73, 86
†2338	10, 19, 23, 25, 67, 68, 69, 70, 73, 86
†2339	16, 17, 19, 20, 22, 25, 31, 70, 73, 75
†2340	13, 16, 17, 19, 20, 22, 24, 70, 73, 75
†2341	13, 16, 17, 19, 20, 22, 25, 31, 70, 73, 75
†2342	16, 17, 19, 20, 22, 24, 25, 31, 52, 70, 73, 75
†2343	16, 17, 19, 20, 22, 70, 73, 74, 75
†2344	16, 19, 20, 22, 24, 57, 65, 70, 73, 75
†2345	16, 19, 20, 21, 22, 24, 44, 70, 73, 75
†2346	17, 19, 20, 22, 23, 24, 48, 57, 62, 65, 70, 73, 75, 86
†2347	16, 19, 20, 21, 31, 43, 44, 70, 73, 75
†2348	16, 19, 20, 22, 70, 73, 75
†2349	16, 19, 20, 55, 65, 70, 73, 75
†2350	13, 16, 17, 19, 20, 22, 24, 31, 52, 70, 73, 75

Code No.	Code Number Singles
†2351	10, 17, 19, 20, 22, 23, 24, 45, 57, 62, 65, 70, 73, 86
†2352	10, 13, 17, 19, 20, 22, 24, 32, 48, 57, 62, 65, 70, 73, 86
†2352	16, 19, 20, 24, 65, 70, 73, 75
†2354	16, 22, 67, 68, 70, 73, 75
†2355	16, 21, 67, 68, 70, 73, 75
†2356	16, 19, 67, 68, 70, 73, 75
†2357	13, 16, 32, 67, 68, 70, 73, 75
†2358	16, 22, 31, 67, 68, 70, 73, 75
†2359	16, 21, 22, 31, 67, 68, 70, 73, 75
†2360	17, 19, 20, 22, 24, 31, 48, 57, 61, 62, 65, 70, 73, 75, 86
†2361	13, 17, 19, 20, 22, 24, 31, 43, 48, 57, 61, 62, 65, 70, 73, 75, 86
†2362	16, 17, 19, 20, 22, 25, 31, 70, 73, 75
†2363	16, 17, 19, 20, 22, 24, 31, 70, 73, 75
†2364	16, 17, 19, 20, 22, 31, 70, 73, 75
†2365	17, 19, 20, 22, 24, 25, 31, 70, 73, 75
†2366	16, 19, 20, 21, 31, 43, 70, 73, 75
†2367	20, 75
†2368	17, 19, 20, 22, 23, 24, 48, 57, 61, 62, 65, 70, 73, 75, 86
†2369	13, 16, 17, 19, 20, 22, 24, 31, 56, 70, 73, 75
†2370	19, 20, 75
†2371	16, 19, 20, 21, 23, 70, 73, 75
†2372	13, 16, 21, 32, 67, 68, 70, 73, 75
†2373	10, 67, 68, 70, 73, 86
†2374	10, 22, 67, 68, 70, 73, 86
†2375	10, 16, 19, 22, 25, 63, 67, 68, 69, 70, 73
†2376	12, 16, 17, 19, 20, 25, 31, 44, 70, 73
†2377	16, 17, 19, 20, 21, 22, 24, 31, 43, 48, 61, 62, 65, 70, 73, 75
†2378	13, 16, 19, 20, 21, 22, 23, 24, 65, 70, 73, 75
†2379	13, 16, 17, 19, 20, 31, 70, 75, 78
†2380	10, 16, 19, 20, 21, 22, 31, 57, 72, 73
†2381	10, 16, 19, 20, 21, 22, 31, 57, 71, 73
†2382	13, 16, 19, 20, 22, 25, 31, 43, 44, 48, 70, 73, 75
†2383	13, 19, 20, 21, 22, 23, 70, 73, 75
†2384	12, 16, 19, 20, 24, 44, 57, 65, 70, 73
†2385	16, 19, 20, 24, 44, 57, 65, 70, 73, 75
†2386	19, 20, 21, 22, 31, 43, 44, 71, 73, 75
†2387	13, 16, 19, 20, 21, 23, 70, 73, 75
†2388	67, 68, 70, 73, 75, 86
†2389	22, 67, 68, 70, 73, 75, 86
†2390	16, 25, 67, 68, 69, 70, 73, 75
†2391	17, 70, 73, 75, 83, 85, 87, 89, 90, 92
†2392	16, 22, 68, 69, 70, 73, 75
†2393	21, 67, 68, 70, 73, 75, 86
†2394	16, 19, 22, 67, 68, 70, 73, 75
†2395	13, 16, 19, 31, 32, 67, 68, 70, 73, 75
†2396	16, 25, 67, 68, 70, 73, 75
†2397	16, 19, 25, 67, 68, 69, 70, 73, 75
†2398	13, 16, 22, 32, 67, 68, 70, 73, 75
†2399	17, 70, 73, 75, 83, 85, 87, 88, 89, 90, 91, 92
†2400	13, 19, 20, 70, 73, 75
†2401	19, 20, 57, 70, 73, 75
†2402	13, 19, 20, 57, 70, 73, 75
†2403	19, 20, 21, 48, 70, 73, 75
†2404	16, 17, 19, 20, 22, 31, 43, 70, 73, 75
†2405	13, 16, 17, 19, 20, 22, 24, 25, 42, 70, 73, 74, 75
†2406	16, 17, 19, 20, 22, 24, 42, 52, 70, 73, 74, 75
†2407	16, 17, 19, 20, 22, 25, 70, 73, 74, 75
†2408	16, 17, 19, 20, 22, 24, 70, 73, 75
†2409	16, 19, 20, 58, 65, 70, 73, 75
†2410	16, 17, 19, 20, 70, 75, 78
†2411	16, 17, 19, 20, 70, 73, 75
†2412	28, 67, 68, 70, 73, 75, 86
†2413	16, 19, 20, 22, 24, 44, 57, 65, 70, 73, 75
†2414	13, 16, 19, 20, 22, 70, 73, 75
†2415	13, 16, 19, 20, 21, 22, 23, 62, 70, 73, 75
†2416	16, 17, 19, 20, 21, 22, 24, 31, 43, 48, 61, 62, 70, 73, 75
†2417	16, 17, 19, 20, 65, 70, 73, 75
†2418	13, 19, 20, 21, 23, 48, 62, 70, 73, 75
†2419	16, 31, 50, 56, 67, 68, 70, 73, 75
†2420	16, 19, 20, 21, 22, 25, 70, 73, 75
†2421	19, 20, 71, 73, 75, 86

†Revised Information. Issue 2

Special Fitments Code–*continued*

Code No.	Code Number Singles
†2422	16, 19, 20, 21, 22, 31, 43, 70, 73, 75
†2423	10, 17, 19, 20, 70, 73, 86
†2424	10, 19, 20, 71, 73, 86
†2425	13, 17, 19, 20, 22, 24, 48, 57, 61, 62, 65, 70, 73, 75, 86
†2426	16, 19, 20, 21, 22, 70, 73, 75
†2427	16, 17, 19, 20, 22, 25, 31, 62, 70, 73, 75
†2428	16, 17, 19, 20, 22, 25, 31, 43, 70, 73, 75
†2429	16, 17, 19, 20, 22, 23, 62, 70, 73, 75
†2430	13, 19, 20, 21, 24, 31, 43, 48, 62, 70, 73, 75
†2431	16, 17, 19, 20, 22, 24, 31, 42, 52, 70, 73, 75
†2432	16, 31, 56, 67, 68, 70, 73, 75
†2433	13, 16, 19, 20, 21, 31, 43, 44, 48, 70, 73, 75
†2434	16, 19, 20, 44, 65, 70, 73, 75
†2435	16, 17, 19, 20, 21, 22, 24, 44, 70, 73, 75
†2436	13, 16, 19, 20, 21, 44, 70, 73, 75
†2437	13, 16, 17, 19, 20, 22, 24, 25, 31, 43, 52, 70, 73, 75
†2438	16, 19, 20, 22, 57, 65, 70, 73, 75
†2439	19, 67, 68, 70, 73, 75, 86
†2440	16, 19, 20, 21, 22, 23, 31, 70, 73, 75
†2441	17, 70, 73, 75, 83, 85, 87, 89, 90
†2442	19, 20, 21, 23, 48, 62, 70, 73, 75
†2443	16, 17, 19, 20, 22, 70, 73, 75
†2444	13, 16, 17, 19, 20, 22, 25, 70, 73, 75
†2445	17, 19, 20, 70, 73,
†2446	17, 19, 20, 22, 24, 57, 62, 65, 70, 73, 75, 86
†2447	19, 20, 44, 65, 70, 73, 75, 86
†2448	19, 20, 65, 70, 73, 75, 86
†2449	12, 16, 19, 20, 44, 57, 65, 70, 73
†2450	13, 19, 20, 21, 22, 48, 70, 73, 75
†2451	16, 44, 67, 68, 70, 73, 75
†2452	13, 16, 31, 32, 67, 68, 70, 73, 75
†2453	16, 21, 31, 67, 68, 70, 73, 75
†2454	13, 16, 21, 31, 32, 67, 68, 70, 73, 75
†2455	19, 20, 70, 73
†2456	19, 20, 48, 62, 63, 70, 73, 75
†2457	16, 17, 19, 20, 22, 24, 25, 43, 70, 73, 74, 75
†2458	10, 14, 20, 30
†2459	17, 70, 73, 75, 85, 87, 88, 89, 90, 91, 92, 104
†2460	16, 19, 20, 44, 57, 65, 70, 73, 75
†2461	13, 19, 20, 44, 57, 65, 70, 73, 86
†2462	13, 21, 32, 67, 68, 70, 73, 75, 86
†2463	70, 73, 75, 85, 87, 88, 89, 90, 91, 92, 104
†2464	19, 20, 57, 65, 70, 73
†2465	19, 20, 22, 44, 57, 65, 70, 73, 75, 86
†2466	16, 17, 19, 20, 31, 70, 73, 75, 78
†2467	16, 17, 19, 20, 21, 31, 43, 70, 73, 75
†2468	16, 17, 19, 20, 21, 22, 23, 24, 48, 61, 62, 70, 73, 75
†2469	19, 20, 70, 73, 75
†2470	13, 32, 67, 68, 70, 73, 75, 86
†2471	16, 24, 67, 68, 70, 73, 75
†2472	21, 22, 67, 68, 70, 73, 75, 86
†2473	19, 21, 24, 67, 68, 70, 73, 75, 86
†2474	16 22, 24, 67, 68, 70, 73, 75
†2475	16, 19, 21, 24, 67, 68, 70, 73, 75
†2476	16, 22, 67, 68, 70, 73
†2477	19, 20 24, 27, 70, 73, 75, 86
†2478	16, 7 18, 20, 22, 24, 70, 73, 74, 75
†2479	13, 16, 17 19, 20, 70, 75, 78
†2480	13, 17, 19, 20, 21, 23, 70, 73, 75
†2481	19, 20, 24, 57, 65, 70, 73, 75, 86
†2482	19, 20, 22, 55, 65, 70, 73, 75, 86
†2483	12, 19, 20, 21, 65, 71, 73, 86
†2484	13, 16, 17, 19, 20, 21, 22, 25, 31, 70, 73, 75
†2485	16, 19, 20, 44, 55, 65, 70, 73, 75
†2486	19, 20, 25, 44, 57, 65, 70, 73, 75, 86
†2487	13, 19, 20, 21, 22, 62, 75
†2488	16, 19, 20, 21, 22, 31, 42, 70, 73, 75
†2489	17, 19, 20, 48, 62, 63, 70, 73, 75
†2490	16, 17, 19, 20, 21, 22, 23, 24 48, 61, 62, 65, 70, 73, 75
†2491	16, 17, 19, 20, 21, 22, 44, 70, 73, 75
†2492	13, 20, 75
†2493	19, 20, 21, 23, 70, 73, 75
†2494	13, 16, 17, 19, 20, 21, 23, 25, 44, 70, 73, 75
†2495	17, 19, 20, 21, 23, 24, 70, 73, 75
†2496	13, 16, 17, 19, 20, 22, 24, 25, 31, 43, 70, 73, 75

Code No.	Code Number Singles
†2497	13, 16, 21, 24, 32, 67, 68, 70, 73, 75
†2498	13, 19, 24, 32, 67, 68, 70, 73, 75, 86
†2499	16, 19, 24, 62, 67, 68, 70, 73, 75
†2500	16, 19, 22, 24, 67, 68, 70, 73, 75
†2501	16, 21, 22, 24, 67, 68, 70, 73, 75
†2502	13, 17, 19, 20, 21, 22, 23, 24, 70, 73, 75, 86
†2503	19, 20, 21, 22, 25, 70, 73, 75, 86
†2504	19, 20, 22, 25, 70, 73, 75, 86
†2505	19, 20, 22, 25, 31, 70, 73, 75, 86
†2506	19, 20, 21, 65, 71, 73, 86
†2507	19, 20, 25, 44, 57, 65, 70, 73, 86
†2508	19, 20, 22, 24, 57, 65, 70, 73, 75, 86
†2509	13, 19, 20, 22, 24, 25, 57, 65, 70, 73, 75, 86
†2510	19, 20, 24, 26, 27, 70, 73, 75, 86
†2511	16, 55, 67, 68, 70, 73, 75
†2512	16, 28, 67, 68, 70, 73, 75
†2513	13, 24, 32, 67, 68, 70, 73, 75, 86
†2514	19, 31, 67, 68, 70, 73, 75, 86
†2515	16, 21, 22, 23, 24, 62, 67, 68, 70, 73, 75
†2516	21, 22, 24, 67, 68, 70, 73, 75, 86
†2517	16, 21, 62, 67, 68, 70, 73, 75
†2518	24, 67, 68, 70, 73, 75, 86
†2519	16, 19, 21, 22, 31, 67, 68, 70, 73, 75
†2520	16, 21, 24, 67, 68, 70, 73, 75
†2521	13, 19, 20, 22, 24, 25, 65, 70, 73, 75, 86
†2522	19, 20, 21, 23, 75
†2523	19, 20, 25, 75
†2524	17, 19, 20, 22, 24, 31, 43, 48, 57, 61, 62, 65, 70, 73, 75, 86
†2525	19, 20, 22, 24, 25, 65, 70, 73, 75, 86
†2526	16, 17, 19, 20, 21, 22, 24, 25, 31, 70, 73, 75
†2527	13, 16, 17, 19, 20, 22, 24, 31, 70, 73, 75
†2528	16, 17, 19, 20, 22, 24, 57, 62, 65, 70, 73, 75
†2529	13, 16, 17, 19, 20, 22, 24, 57, 62, 65, 70, 73, 75
†2530	16, 17, 19, 20, 21, 22, 24, 57, 65, 70, 73, 75
†2531	19, 20, 25, 27, 28, 75
†2532	19, 20, 21, 23, 27, 28, 75
†2533	19, 20, 44, 65, 70, 73, 86
†2534	17, 70, 73, 75, 83, 85, 87, 88, 89, 90, 92
†2535	17, 19, 20, 22, 24, 31, 56, 70, 73, 75
†2536	17, 70, 73, 75, 87, 88, 89, 92
†2537	17, 70, 73, 75, 88, 92
†2538	16, 19, 24, 31, 67, 68, 70, 73, 75
†2539	16, 24, 31, 67, 68, 70, 73, 75
†2540	13, 16, 19, 24, 32, 67, 68, 70, 73, 75
†2541	19, 25, 31, 67, 68, 69, 70, 73, 75, 86
†2542	22, 24, 67, 68, 70, 73, 75, 86
†2543	17, 19, 20, 23, 29, 48, 70, 73, 75
†2544	13, 19, 20, 21, 22, 23, 62, 70, 73, 75
†2545	13, 19, 20, 21, 31, 43, 44, 48, 70, 73, 75, 86
†2546	13, 19, 20, 21, 22, 23, 24, 65, 70, 73, 75
†2547	19, 20, 21, 22, 23, 70, 73, 75
†2548	13, 17, 19, 20, 22, 24, 25, 31, 70, 73, 75
†2549	17, 19, 20, 22, 24, 31, 70, 73, 75
†2550	19, 20, 21, 65, 71, 73, 75, 86
†2551	17, 70, 73, 75, 79, 83, 87, 88, 89, 90, 91
†2552	17, 70, 73, 75, 88
†2553	17, 70, 73, 75, 87, 88
†2554	13, 17, 32, 70, 73, 75, 87, 88
†2555	13, 16, 24, 32, 67, 68, 70, 73, 75
†2556	13, 16, 21, 22, 24, 32, 67, 68, 70, 73, 75
†2557	13, 19, 20, 22, 70, 73, 75
†2558	13, 17, 19, 20, 21, 23, 25, 44, 70, 73, 75
†2559	19, 20, 44, 57, 65, 70, 73, 86
†2560	19, 20, 22, 24, 44, 65, 70, 73, 75, 86
†2561	17, 19, 20, 21, 23, 25, 44, 70, 73, 75
†2562	17, 70, 73, 75, 88, 90
†2563	17, 70, 73. 75, 87, 88, 89
†2564	17, 70, 73, 75, 87, 88, 91
†2565	17, 70, 73, 75, 88, 91
†2566	17, 70, 73, 75, 79, 87, 88, 90, 91
†2567	16, 31, 65, 67, 68, 70, 73, 75
†2568	13, 16, 20, 75
†2569	12, 13, 20
†2570	16, 20, 75
†2571	17, 19, 20, 22, 62, 70, 73, 75
†2572	19, 20, 24, 65, 70, 73, 75, 86
†2573	13, 16, 19, 20, 22, 24, 57, 62, 65, 70, 73, 75
†2574	16, 19, 20, 24, 27, 70, 73, 75

†Revised Information. Issue 2

Special Fitments Code–*continued*

Code No.	Code Number Singles
2575	13, 16, 19, 20, 44, 65, 70, 73
2576	17, 19, 20, 22, 70, 73, 75, 86
2577	19, 20, 21, 22, 31, 43, 70, 73, 75
2578	17, 19, 20, 22, 31, 43, 70, 73, 75
2579	17, 19, 20, 22, 70, 73, 74, 75
2580	17, 19, 20, 22, 25, 31, 70, 73, 75
2581	17, 19, 20, 22, 25, 31, 43, 70, 73, 75
2582	67, 68, 70, 73, 75
2583	17, 19, 20, 22, 31, 70, 73, 75
2584	13, 17, 19, 20, 22, 25, 31, 70, 73, 75
2585	17, 19, 20, 21, 22, 24, 25, 31, 70, 73, 75
2586	19, 20, 55, 65, 70, 73, 75
2587	31, 67, 68, 70, 73, 75
2588	22, 67, 68, 70, 73, 75
2589	19, 24, 31, 67, 68, 70, 73, 75
2590	22, 24, 67, 68, 70, 73, 75
2591	21, 67, 68, 70, 73, 75
2592	21, 22, 24, 67, 68, 70, 73, 75
2593	21, 22, 67, 68, 70, 73, 75
2594	24, 31, 67, 68, 70, 73, 75
2595	13, 19, 24, 32, 67, 68, 70, 73, 75
2596	24, 67, 68, 70, 73, 75
2597	19, 21, 24, 67, 68, 70, 73, 75
2598	13, 32, 67, 68, 70, 73, 75
2599	13, 24, 32, 67, 68, 70, 73, 75
2600	21, 24, 67, 68, 70, 73, 75
2601	13, 21, 22, 24, 32, 67, 68, 70, 73, 75
2602	22, 31, 67, 68, 70, 73, 75
2603	17, 19, 20, 22, 70, 73, 75
2604	13, 17, 19, 20, 22, 24, 31, 70, 73, 75
2605	19, 20, 21, 22, 31, 42, 70, 73, 75
2606	25, 67, 68, 69, 70, 73, 75
2607	21, 22, 23, 24, 62, 67, 68, 70, 73, 75
2608	28, 67, 68, 70, 73, 75
2609	21, 62, 67, 68, 70, 73, 75
2610	19, 67, 68, 70, 73, 75
2611	19, 21, 22, 31, 67, 68, 70, 73, 75
2612	17, 19, 20, 22, 24, 70, 73, 75
2613	17, 19, 20, 21, 22, 44, 70, 73, 75
2614	19, 20, 44, 65, 70, 73
2615	19, 20, 65, 70, 73, 75
2616	19, 20, 24, 57, 65, 70, 73, 75
2617	31, 65, 67, 68, 70, 73, 75
2618	12, 19, 20, 48, 62, 70, 73
2619	19, 20, 71, 73, 75
2620	13, 17, 19, 20, 70, 75, 78
2621	13, 19, 20, 21, 48, 70, 73, 75
2622	19, 20, 22, 24, 65, 70, 73, 75, 86
2623	19, 20, 21, 31, 43, 48, 70, 73, 75, 86
2624	22, 23, 67, 68, 70, 73, 75, 86
2625	13, 19, 20, 65, 70, 73, 75
2626	19, 22, 67, 68, 70, 73, 75
2627	62, 67, 68, 70, 73, 75
2628	13, 21, 22, 32, 67, 68, 70, 73, 75
2629	13, 19, 20, 22, 24, 65, 70, 73, 75, 86
2630	19, 20, 21, 23, 48, 70, 73, 75, 86
2631	19, 20, 23, 62, 70, 73, 75
2632	13, 19, 20, 21, 22, 23, 25, 70, 73, 75
2633	19, 20, 22, 28, 70, 73, 86
2634	19, 31, 67, 68, 70, 73, 75
2635	31, 42, 67, 68, 70, 73, 75
2636	17, 70, 73, 75, 87, 88, 90, 91
2637	17, 70, 73, 75, 88, 89, 92, 103, 106, 107
2638	17, 70, 73, 75, 79, 87, 88, 91
2639	17, 70, 73, 75, 85, 87, 88, 89, 90, 91, 92, 93
2640	17, 70, 73, 75, 79, 88, 104
2641	17, 70, 73, 75, 87, 88, 91, 105
2642	17, 70, 73, 75, 87, 88, 89, 90, 91, 92, 105
2643	17, 70, 73, 75, 88, 91, 92, 93, 105
2644	17, 70, 73, 75, 87, 88, 89, 91, 105
2645	17, 70, 73, 75, 88, 93, 103
2646	17, 70, 73, 75, 87, 88, 91, 104
2647	17, 70, 73, 75, 88, 90, 91, 104
2648	17, 70, 73, 75, 87, 88, 90, 91, 104
2649	17, 70, 73, 75, 87, 88, 92
2650	17, 70, 73, 75, 88, 103
2651	17, 70, 73, 75, 79, 81, 87, 88, 91
2652	17, 19, 20, 21, 65, 70, 73, 75
2653	17, 19, 20, 21, 31, 65, 70, 73, 75
2654	19, 20, 22, 70, 73, 75, 86
2655	17, 19, 20, 65, 70, 73, 75
2656	13, 19, 20, 21, 22, 31, 43, 72, 73, 75, 86
2657	19, 20, 21, 22, 31, 43, 72, 73, 75, 86
2658	19, 20, 22, 31, 43, 72, 73, 75, 86
2659	17, 19, 20, 21, 22, 24, 25, 31, 43, 48, 61, 62, 65, 70, 73, 75, 86
2660	13, 19, 20, 22, 65, 70, 73, 75
2661	13, 17, 32, 70, 73, 75, 87, 88, 89, 106, 107
2662	17, 70, 73, 75, 81, 85, 88, 92
†2663	17, 70, 73, 75, 81, 87, 88, 90
†2664	17, 70, 73, 75, 81, 87, 88, 89, 90, 91, 92, 106
†2665	13, 19, 20, 22, 70, 73, 75, 86
†2666	13, 19, 20, 55, 65, 70, 73, 75, 86
†2667	19, 20, 21, 22, 70, 73, 75, 86
†2668	13, 19, 20, 65, 70, 73, 75, 86
†2669	13, 19, 20, 22, 31, 70, 73, 75, 86
†2670	12, 17, 19, 20, 44, 57, 65, 70, 73, 86
†2671	19, 21, 67, 68, 70, 73, 75, 86
†2672	21, 23, 67, 68, 70, 73, 75
†2673	70, 73, 75, 81, 85, 87, 88, 89, 90, 91, 92, 104
†2674	75, 85, 87, 88, 89, 90, 91, 92, 104
†2675	17, 19, 20, 21, 22, 24, 31, 43, 48, 61, 62, 65, 70, 73, 75, 86
†2676	19, 20, 65, 70, 73
†2677	17, 70, 73, 75, 87, 88, 89, 91
†2678	17, 70, 73, 75, 87, 88, 90
†2679	17, 70, 73, 75, 81, 88, 91
†2680	17, 70, 73, 75, 81, 87, 88, 90, 91
†2681	17, 70, 73, 75, 88, 89, 90
†2682	17, 70, 73, 75, 88, 90, 91
†2683	17, 70, 73, 75, 87, 88, 90, 91, 92, 93, 104
†2684	13, 17, 32, 70, 73, 75, 88
†2685	13, 17, 32, 70, 73, 75, 87, 88, 90, 91, 92
†2686	13, 17, 32, 70, 73, 75, 79, 85, 88, 89
†2687	17, 70, 73, 75, 87, 88, 89, 90, 91, 105
†2688	17, 70, 73, 75, 79, 88, 92
†2689	17, 70, 73, 75, 88, 106, 107
†2690	17, 70, 73, 75, 87, 88, 91, 92, 104
†2691	17, 70, 73, 75, 88, 92, 106, 107
†2692	17, 70, 73, 75, 87, 88, 90, 91, 93, 106
†2693	17, 70, 73, 75, 85, 87, 88, 105
†2694	17, 70, 73, 75, 87, 88, 89, 90, 106
†2695	13, 19, 21, 32, 67, 68, 70, 73, 75, 86
†2696	19, 21, 67, 68, 70, 73, 75
†2697	13, 21, 32, 67, 68, 70, 73, 75
†2698	17, 70, 73, 75, 87, 88, 92, 103
†2699	17, 70, 73, 75, 87, 88, 91, 106, 107
†2700	13, 17, 32, 70, 73, 75, 88, 90, 91, 92, 93
†2701	17, 70, 73, 75, 87, 88, 90, 91, 92, 106, 107
†2702	17, 70, 73, 75, 87, 88, 89, 90, 91
†2703	17, 70, 73, 75, 85, 87, 88, 89, 90, 92
†2704	17, 70, 73, 75, 80, 85, 87, 88, 89, 90, 91, 92, 104
†2705	70, 73, 75, 80, 85, 87, 88, 89, 90, 91, 92, 104
†2706	19, 20, 44, 65, 70, 73, 75
†2707	13, 17, 19, 20, 21, 44, 48, 70, 73, 75
†2708	17, 19, 20, 21, 44, 48, 70, 73
†2709	13, 19, 20, 22, 25, 31, 43, 44, 48, 57, 70, 73, 75
†2710	19, 20, 21, 22, 23, 48, 70, 73, 75, 86
†2711	19, 20, 44, 55, 65, 70, 73, 75
†2712	70, 73, 75, 81, 88, 89, 90
†2713	13, 19, 20, 21, 23, 62, 70, 73, 75
†2714	17, 70, 73, 75, 88, 90, 92, 104
†2715	17, 70, 73, 75, 85, 87, 88, 89, 90, 91, 92, 103, 106
†2716	13, 22, 32, 67, 68, 70, 73, 75
†2717	21, 31, 67, 68, 70, 73, 75
†2718	21, 22, 31, 67, 68, 70, 73, 75
†2719	31, 56, 67, 68, 70, 73, 75
†2720	25, 67, 68, 69, 70, 73, 75, 86
†2721	17, 70, 73, 75, 87, 88, 89, 90, 91, 103
†2722	13, 17, 32, 70, 73, 75, 88, 90, 91
†2723	13, 17, 32, 70, 73, 75, 85, 87, 88, 89, 90, 91, 93, 105
†2724	17, 70, 73, 75, 88, 89
†2725	17, 70, 73, 75, 88, 89, 103
†2726	17, 70, 73, 75, 87, 88
†2727	17, 70, 73, 75, 88, 90, 93
†2728	19, 20, 55, 65, 70, 73, 75, 86
†2729	19, 20, 21, 44

†Revised Information. Issue 3

Special Fitments Code—*continued*

Code No.	Code Number Singles
†2730	17, 19, 20, 75
†2731	13, 17, 19, 20, 21, 22, 75
†2732	12, 17, 19, 20, 22, 25
†2733	19, 20, 21, 22, 23, 48, 70, 73, 75
†2734	19, 20, 70, 73, 75, 86
†2735	17, 19, 20, 44, 70, 73
†2736	17, 19, 20, 31, 70, 75, 78
†2737	13, 70, 73, 75, 81, 88, 89, 90, 104
†2738	13, 17, 70, 73, 75, 87, 88, 89, 90
†2739	25, 44, 69, 70, 73
†2740	19, 22, 67, 68, 70, 73, 75, 86
†2741	21, 23, 25, 67, 68, 69, 70, 73, 75
†2742	21, 23, 67, 68, 70, 73, 75, 86
†2743	17, 70, 73, 75, 88, 90, 92, 93, 104
†2744	17, 70, 73, 75, 81, 88, 93
†2745	17, 70, 73, 75, 87, 88, 89, 90, 91, 92, 93
†2746	17, 70, 73, 75, 81, 88
†2747	17, 70, 73, 75, 88, 93
†2748	17, 70, 73, 75, 88, 92, 93, 103, 106
†2749	17, 70, 73, 75, 87, 88, 89, 92, 103
†2750	17, 70, 73, 75, 79, 88, 105
†2751	17, 70, 73, 75, 88, 89, 90, 91, 106, 107
†2752	17, 70, 73, 75, 88, 89, 91, 92, 104
†2753	13, 17, 32, 70, 73, 75, 87, 88, 89, 90, 91, 93, 105
†2754	17, 70, 73, 75, 88, 91, 92, 106, 107
†2755	17, 70, 73, 75, 87, 88, 91, 93, 106, 107
†2756	17, 70, 73, 75, 88, 89, 92, 103
†2757	12, 17, 19, 20, 44, 57, 61, 65, 70, 73, 86
†2758	17, 70, 73, 75, 81, 88, 89, 90
†2759	17, 70, 73, 75, 85, 87, 88, 89, 90, 91, 92
†2760	70, 73, 75, 80, 81, 85, 87, 88, 89, 90, 91, 92, 104
†2761	19, 21, 23, 67, 68, 70, 73, 75
†2762	19, 55
†2763	17, 70, 73, 75, 88, 92, 104
†2764	70, 73, 75, 81, 87, 88, 89, 90, 91, 92, 93, 105
†2765	13, 17, 19, 20, 21, 22, 76
†2766	17, 70, 73, 75, 85, 88, 90, 92, 104
†2767	17, 70, 73, 75, 85, 88, 89, 90, 91, 92, 104
†2768	13, 17, 19, 20, 48, 70, 73, 75
†2769	13, 17, 19, 20, 31, 70, 75, 78
†2770	19, 20, 22, 23, 72, 73, 75
†2771	22, 31, 43, 67, 68, 70, 73, 75, 86
†2772	19, 25, 67, 68, 69, 70, 73, 75
†2773	17, 70, 73, 75, 81, 88, 89
†2774	17, 70, 73, 75, 87, 88, 89, 92, 93
†2775	17, 70, 73, 75, 88, 89, 91
†2776	17, 70, 73, 75, 79, 88, 93
†2777	17, 70, 73, 75, 88, 90, 91, 93
†2778	17, 70, 73, 75, 88, 89, 90, 91, 92
†2779	17, 70, 73, 75, 88, 91, 91, 92, 103
†2780	17, 70, 73, 75, 87, 88, 104
†2781	17, 70, 73, 75, 88, 91, 92
†2782	17, 70, 73, 75, 79, 88, 89, 90, 91, 92, 93
†2783	17, 70, 73, 75, 79, 88, 89, 91
†2784	17, 70, 73, 75, 79, 80, 87, 88, 89, 90, 92, 105, 106
†2785	17, 70, 73, 75, 81, 87, 88, 89, 90, 92, 104
†2786	70, 73, 75, 81, 85, 88, 89, 91
†2787	70, 73, 75, 81, 85, 88, 89, 91, 105, 106, 107
†2788	70, 73, 75, 81, 85, 88, 91, 93, 106
†2789	25, 44, 67, 68, 69, 70, 73, 76
†2790	13, 17, 19, 20, 25, 31, 70, 75, 78
†2791	17, 19, 20, 22, 25, 70, 73, 75
†2792	19, 20, 22, 23, 24, 48, 70, 73, 75
†2793	13, 19, 20, 70, 73, 75, 86
†2794	13, 19, 20, 23, 24, 70, 73, 75
†2795	17, 19, 20, 21, 22, 23, 24, 48, 61, 62, 65, 75, 86
†2796	19, 23, 67, 68, 70, 73, 75
†2797	13, 19, 20, 21, 44, 65, 70, 73, 86
†2798	13, 19, 20, 44, 65, 70, 73, 86
†2799	22, 31, 67, 68, 70, 73, 75, 86
†2800	21, 22, 23, 67, 68, 70, 73, 75, 86
†2801	17, 70, 73, 75, 85, 88, 89, 91, 92, 93, 106, 107
†2802	19, 21, 22, 67, 68, 70, 73, 75
†2803	17, 19, 20, 22, 24, 31, 43, 48, 57, 61, 65, 70, 73, 75, 86
†2804	31, 67, 68, 70, 73, 75, 86
†2805	23, 67, 68, 70, 73, 75
†2806	13, 19, 20, 21, 44, 70, 73, 75
†2807	13, 19, 20, 22, 25, 31, 43, 44, 48, 70, 73, 75
†2808	13, 20, 25, 75
†2809	70, 73, 75, 81, 88, 89, 90, 104
†2810	17, 19, 20, 22, 25, 31, 43, 65, 70, 73, 75
†2811	17, 70, 73, 75, 88, 104
†2812	19, 20, 21, 62, 75
†2813	19, 20, 21, 65, 70, 73, 75, 86
†2814	17, 19, 20, 22, 44, 48, 57, 62, 65, 70, 73, 86
†2815	17, 19, 20, 22, 44, 48, 61, 62, 65, 70, 73, 86
†2816	70, 73, 75, 81, 85, 87, 88, 90, 104
†2817	17, 19, 20, 22, 25, 31, 56, 70, 73, 75
†2818	21, 22, 25, 62, 67, 68, 69, 70, 73, 75, 86
†2819	21, 22, 31, 62, 67, 68, 70, 73, 75
†2820	13, 19, 32, 67, 68, 70, 73, 75
†2821	19, 21, 62, 67, 68, 70, 73, 75
†2822	17, 19, 20, 22, 25, 31, 65, 70, 73, 75
†2823	13, 19, 21, 22, 23, 25, 32, 62, 67, 68, 69, 70, 73, 75, 86
†2824	21, 31, 67, 68, 70, 73, 75, 86
†2825	22, 55, 67, 68, 70, 73, 75, 86
†2826	12, 19, 70, 73
†2827	70, 73, 75, 81, 85, 87, 88, 90
†2828	28, 70, 73
†2829	13, 17, 19, 20, 22, 60, 70, 73, 75
†2830	19, 20, 21, 22, 23, 24, 25, 48, 57, 61, 62, 70, 75, 78, 86
†2831	19, 20, 65, 71, 73, 75
†2832	13, 19, 20, 24, 62, 65, 70, 73, 75, 86
†2833	19, 20, 58, 65, 70, 73, 75, 86
†2834	19, 20, 21, 22, 23, 24, 48, 57, 70, 75, 78, 86
†2835	13, 19, 75
†2836	17, 19, 20, 21, 23, 24, 75
†2837	19, 20, 29, 71, 73, 75, 86
†2838	13, 19, 22, 32, 55, 67, 68, 70, 73, 75, 86
†2839	21, 22, 62, 67, 68, 70, 73, 75, 86
†2840	21, 22, 62, 67, 68, 70, 73, 75
†2841	17, 70, 73, 75,
†2842	17, 19, 20, 22, 44, 48, 57, 61, 62, 65, 70, 73, 86
†2843	17, 19, 20, 44, 65, 70, 73, 75
†2844	12, 19, 20, 21, 65, 71, 73
†2845	13, 19, 20, 21, 44, 70, 73, 75, 86
†2846	70, 73, 75, 85, 87, 88, 89, 90, 91, 92, 104, 111
†2847	19, 20, 21, 65, 71, 73, 75
†2848	44, 67, 68, 70, 73, 75
†2849	21, 22, 28, 44, 67, 68, 70, 73, 75
†2850	13, 17, 19, 20, 22, 24, 57, 62, 65, 70, 73, 86
†2851	17, 19, 20, 21, 22, 24, 48, 65, 70, 73, 75, 86
†2852	19, 20, 44, 55, 65, 70, 73, 75, 86
†2853	13, 19, 20, 21, 23, 31, 44, 48, 70, 73, 75
†2854	13, 17, 19, 20, 21, 22, 23, 24, 48, 62, 65, 70, 73, 75, 86
†2855	17, 19, 20, 65, 70, 73, 75, 86
†2856	13, 17, 19, 20, 21, 22, 24, 31, 43, 48, 61, 62, 65, 70, 73, 75, 86
†2857	17, 19, 20, 22, 24, 70, 73, 74, 75, 86
†2858	17, 70, 73, 75, 88, 92, 103
†2859	12, 17, 88
†2860	22, 25, 67, 68, 69, 70, 73, 75, 86
†2861	25, 28, 67, 68, 69, 70, 73, 75, 86
†2862	17, 19, 20, 21, 22, 24, 48, 61, 65, 70, 73, 75, 86
†2863	17, 70, 73, 75, 81, 87, 88
†2864	17, 70, 73, 75, 81, 88, 89, 91
†2865	17, 70, 73, 75, 81, 88, 89, 91, 93, 106
†2866	17, 19, 20, 21, 22, 23, 24, 48, 61, 62, 65, 70, 73, 75, 86
†2867	17, 70, 73, 75, 81, 88, 91, 92, 93, 105
†2868	17, 70, 73, 75, 81, 88, 89, 91, 92
†2869	17, 70, 73, 75, 87, 88, 89, 90
†2870	17, 70, 73, 75, 88, 91, 104
†2871	13, 17, 32, 70, 73, 75, 88, 104
†2872	13, 17, 32, 70, 73, 75, 87, 88, 92, 103
†2873	17, 70, 73, 75, 87, 88, 90, 91, 92, 106
†2874	13, 17, 32, 70, 73, 75, 87, 88, 90, 92, 104
†2875	13, 21, 22, 32, 67, 68, 70, 73, 75, 86
†2876	17, 19, 20, 21, 22, 23, 24, 48, 62, 65, 70, 73, 75, 86
†2877	19, 20, 27, 28, 75

†Revised Information. Issue 3

Special Fitments Code–*continued*

Code No.	Code Number Singles
2878	17, 19, 20, 28, 70, 75, 78
2879	19, 20, 21, 75
2880	17, 19, 20, 22, 23, 62, 70, 73, 75
2881	86, 96, 99, 101, 102
2882	22, 62, 67, 68, 70, 73, 75
2883	19, 55, 67, 68, 70, 73, 75, 86
2884	13, 19, 20, 22, 24, 57, 65, 70, 73, 75, 86
2885	13, 19, 20, 22, 23, 24, 65, 70, 73, 75, 86
2886	19, 20, 22, 23, 24, 65, 70, 73, 75, 86
2887	70, 73, 75, 88
2888	17, 81
2889	17, 57, 70, 73, 75, 104, 113
2890	92, 103, 106, 107
2891	70, 73, 75, 79, 85, 87, 88, 91
2892	17, 70, 73, 75, 87, 88, 91, 92, 106, 107
2893	17, 70, 73, 75, 79, 88, 92, 105, 106, 107
2894	70, 73, 75, 79, 80, 85, 87, 88, 89, 90, 91, 92, 93, 103, 106, 107
2895	13, 32, 70, 73, 75, 79, 80, 81, 87, 88, 89, 90, 91, 92, 93, 103, 106, 107
2896	13, 70, 73, 75, 79, 81, 87, 88, 89, 90, 91, 92, 93, 103, 106, 107
2897	21, 62, 67, 68, 70, 73, 75, 86
2898	19, 20, 44, 58, 65, 70, 73, 75
2899	19, 23, 25, 44, 69, 70, 73
2900	19, 25, 44, 67, 68, 69, 70, 73, 75
2901	13, 19, 20, 21, 22, 70, 73, 75, 86
2902	13, 32, 70, 73, 75, 88
2903	70, 73, 75, 79, 85, 87, 88, 90, 91, 92, 103
2904	13, 32, 70 73, 75, 79, 85, 88, 89, 90, 91
2905	19, 20, 28, 75
2906	19, 20, 22, 70, 73, 86
2907	19, 21, 22, 25, 31, 62, 67, 68, 69, 70, 73, 75
2908	13, 17, 19, 20, 21, 23, 44, 48, 70, 73, 75
2909	13, 22, 31, 32, 67, 68, 70, 73, 75
2910	19, 20, 25, 44, 65, 70, 73, 86
2911	13, 17, 19, 20, 21, 23, 48, 70, 73, 75
2912	13, 17, 19, 20, 21, 31, 43, 44, 48, 70, 73, 75
2913	13, 17, 32, 70, 73, 75, 79, 88, 89
2914	17, 92
2915	19, 20, 22, 31, 57, 72, 73, 75
2916	19, 22, 62, 67, 68, 70, 73, 75
2917	13, 17, 32, 70, 73, 75, 88, 91, 92, 103, 106, 107, 112
2918	17, 19, 20, 21, 22, 24, 31, 43, 48, 57, 61, 62, 65, 70, 73, 75, 86
2919	17, 70, 73, 75, 79, 80, 87, 88, 89, 90, 91, 92, 93, 103, 106, 107
2920	70, 73, 75, 80, 88, 90, 91, 92, 103, 106
2921	70, 73, 75, 85, 87, 88, 90
2922	13, 19, 21, 32, 67, 68, 70, 73, 75
2923	21, 25, 67, 68, 69, 70, 73, 75
2924	13, 17, 32, 70, 73, 75, 79, 80, 87, 88, 89, 90, 91, 92, 93, 103, 106, 107
2925	17, 57, 70, 73, 75, 88, 104, 113
2926	13, 17, 32, 70, 73, 75, 81, 87, 88, 91
2927	17, 70, 73, 75, 87, 88, 89, 90, 91, 104, 113
2928	19, 20, 22, 57, 72, 73, 75
2929	70, 73, 81
2930	17, 70, 73, 75, 79, 85, 88
2931	70, 73, 75, 87, 88, 89, 90, 91, 92, 104
2932	13, 32, 70, 73, 75, 87, 88, 89, 90, 91, 92, 105
2933	70, 73, 75, 87, 88, 89, 90, 91
2934	70, 73, 75, 79, 87, 88, 90, 91, 93, 106, 107
2935	13, 32, 70, 73, 75, 88, 89, 92, 105
2936	19, 20, 22, 48, 70, 73, 75
2937	13, 19, 20, 22, 24, 31, 43, 48, 62, 70, 73, 75
2938	17, 19, 20, 21, 22, 70, 73, 75, 86
2939	17, 19, 20, 25, 31, 70, 75, 78
2940	17, 19, 20, 21, 22, 24, 31, 43, 48, 61, 65, 70, 73, 75, 86
2941	17, 70, 73, 75, 88, 90, 91, 105
2942	17, 70, 73, 75, 81, 88, 89, 90, 91
2943	17, 70, 73, 75, 81, 87, 88, 89
2944	70, 73, 75, 79, 80, 81, 85, 87, 88, 89, 90, 103, 106, 107
2945	13, 17, 57, 70, 73, 75, 79, 85, 87, 88, 89, 90, 91, 92, 93, 103, 106
2946	17, 19, 20, 44, 70, 73, 86
2947	13, 19, 20, 22, 25, 43, 44, 48, 57, 70, 73, 75
2948	17, 19, 20, 22, 24, 70, 73, 75, 86
2949	19, 21, 22, 25, 62, 67, 68, 69, 70, 73, 75
2950	19, 21, 22, 31, 62, 67, 68, 70, 73, 75

Code No.	Code Number Singles
2951	17, 70, 73, 75, 87, 88, 90, 91, 92, 103
2952	17, 70, 73, 75, 88, 90, 91, 92, 103
2953	17, 70, 73, 75, 87, 88, 89, 90, 91, 92, 93, 103, 106, 107
2954	17, 19, 20, 21, 22, 24, 48, 61, 70, 73, 75
2955	24, 62, 67, 68, 70, 73, 75
2956	13, 17, 70, 73, 75, 79, 81, 85, 87, 88, 90, 93, 106
2957	70, 73, 75, 81, 88, 90, 104
2958	20, 44, 65
2959	17, 70, 73, 75, 81, 87, 88, 89, 90, 91
2960	70, 73, 75, 79, 88, 90, 91, 103
2961	13, 32, 70, 73, 75, 79, 88, 90, 91, 103
2962	19, 20, 57, 65, 70, 73, 75, 86
2963	13, 17, 32, 70, 73, 75, 87, 88, 89, 90, 91, 92, 93, 103
2964	13, 17, 32, 70, 73, 75, 87, 88, 89, 90, 91, 92, 93, 103, 106, 107
2965	13, 19, 20, 57, 63, 65, 70, 73, 75, 86
2966	13, 17, 70, 73, 75, 79, 87, 88, 89, 90, 93, 106
2967	17, 19, 20, 22, 24, 31, 43, 52, 65, 70, 73, 75, 86
2968	19, 20, 25, 44, 65, 70, 73, 75, 86
2969	13, 17, 19, 20, 21, 22, 31, 70, 73, 75, 86
2970	19, 20, 22, 24, 25, 57, 65, 70, 73, 75, 86
2971	13, 21, 22, 23, 32, 67, 68, 70, 73, 75
2972	17, 70, 73, 75, 87, 88, 89, 90, 91, 92, 93, 103
2973	12, 17, 70, 73, 88, 117
2974	12, 17, 70, 73, 87, 88, 91, 117
2975	17, 81, 89, 117
2976	12, 17, 70, 73, 81, 87, 88, 91, 117
2977	13, 19, 20, 58, 65, 70, 73, 75, 86
2978	12, 17, 70, 73, 87, 88, 117
2979	17, 19, 20, 22, 25, 31, 44, 70, 73
2980	13, 17, 19, 20, 21, 22, 24, 31, 43, 70, 73, 75
2981	12, 13, 17, 70, 73, 79, 85, 87, 88, 89, 90, 93, 106, 117
2982	12, 17, 70, 73, 88, 103, 106, 107, 117
2983	17, 19, 20, 21, 22, 31, 65, 70, 73, 75, 86
2984	13, 17, 19, 20, 22, 24, 25, 31, 70, 73, 75, 86
2985	17, 19, 20, 31, 44, 70, 73
2986	13, 17, 19, 20, 22, 24, 25, 31, 56, 70, 73, 56, 86
2987	12, 17, 70, 73, 88, 89, 90, 117
2988	12, 17, 70, 73, 87, 88, 90, 91, 117
2989	12, 17, 70, 73, 81, 87, 88, 89, 90, 117
2990	12, 17, 70, 73, 88, 92, 117
2991	19, 20, 57, 72, 73, 75, 86
2992	13, 17, 19, 20, 22, 24, 70, 73, 75, 86
2993	17, 19, 20, 21, 22, 25, 31, 70, 73, 75, 86
2994	17, 19, 20, 22, 25, 31, 70, 73, 75, 86
2995	19, 20, 22, 31, 57, 72, 73, 86
2996	19, 20, 22, 31, 57, 72, 73, 75, 86
2997	21, 22, 23, 62, 67, 68, 70, 73, 75, 86
2998	19, 22, 23, 67, 68 70, 73, 75, 86
2999	19, 20, 44, 57, 65, 70, 73, 75, 86
3000	12, 70, 73, 88, 111, 117
3001	17, 75, 81, 89
3002	12, 13, 70, 73, 88, 90, 92, 104, 117
3003	12, 13, 32, 57, 70, 73, 88, 89, 92, 105, 117
3004	12, 17, 57, 70, 73, 88, 89, 90, 93, 104, 113, 117
3005	12, 17, 57, 70, 73, 88, 89, 90, 104, 113, 117
3006	13, 20, 75, 86
3007	19, 20, 57, 72, 73, 75
3008	19, 20, 22, 31, 57, 72, 73
3009	13, 31, 32, 67, 68, 70, 73, 75
3010	19, 20, 31, 71, 73, 75, 86
3011	13, 19, 20, 21, 22, 31, 43, 70, 73, 75, 86
3012	13, 19, 20, 21, 22, 23, 48, 62, 70, 73, 75
3013	13, 19, 20, 21, 22, 25, 31, 43, 70, 73, 75, 86
3014	12, 17, 70, 73, 87, 88, 89, 90, 117
3015	12, 17, 70, 73, 81, 88, 117
3016	12, 13, 17, 70, 73, 79, 80, 87, 88, 89, 90, 92, 106, 107, 117
3017	12, 70, 73, 88, 89, 105, 117
3018	65, 86
3019	17, 70, 73, 75, 81, 87, 88, 92, 93
3020	12, 70, 73, 81, 88, 111, 117
3021	13, 17, 19, 20, 21, 22, 23, 24, 70, 73, 75
3022	19, 20, 58, 65, 75
3023	17, 19, 20, 21, 22, 23, 24, 70, 73, 75
3024	17, 19, 20, 21, 22, 24, 31, 43, 70, 73, 75
3025	13, 19, 20, 21, 22, 31, 57, 72, 73, 75
3026	19, 20, 70, 73, 86
3027	17, 19, 20, 22, 44, 70, 73, 75, 86

Special Fitments Code—*continued*

Code No.	Code Number Singles
3028	19, 65, 70, 73, 75
3029	17, 19, 20, 21, 22, 24, 25, 31, 70, 73, 75, 86
3030	17, 19, 20, 22, 24, 25, 31, 52, 70, 73, 75, 86
3031	19, 28, 67, 68, 70, 73, 75
3032	19, 21, 25, 67, 68, 69, 70, 73, 75
3033	86, 94, 99, 101, 102
3034	19, 25, 28, 67, 68, 69, 70, 73, 75
3035	70, 73, 88, 112, 117
3036	12, 70, 73, 81, 88, 92, 104, 106, 107, 111, 117
3037	12, 17, 70, 73, 81, 88, 104, 117
3038	19, 20, 21, 22, 23, 62, 70, 73, 75
3039	13, 19, 20, 21, 22, 23, 62, 70, 73
3040	22, 25, 67, 68, 69, 70, 73, 75
3041	12, 70, 73, 88, 117
3042	12, 17, 70, 73, 87, 88, 91, 92, 117
3043	13, 70, 73, 75, 79, 87, 88, 90, 91, 92, 93, 104, 106, 107
3044	94, 95, 96, 97, 98, 99, 102
3045	70, 73, 75, 88, 89, 90
3046	17, 19, 20, 25, 44, 65, 70, 73, 86
3047	17, 70, 73, 87, 88, 91, 103, 112, 117
3048	17, 70, 73, 75, 79, 87, 88, 90, 91, 93, 106, 107
3049	70, 73, 75, 88, 111
3050	70, 73, 75, 81, 88, 92, 104, 106, 107, 111
3051	70, 73, 75, 81, 88, 111
3052	19, 20, 22, 44, 67, 68, 70, 73, 75
3053	13, 19, 20, 21, 22, 57, 72, 73, 75
3054	17, 19, 20, 21, 31, 70, 73, 75
3055	10, 13, 17, 19, 20, 21, 22, 24, 31, 42., 70, 73, 75
3056	12, 17, 83, 104
3057	19, 20, 48, 70, 73, 75
3058	17, 19, 20, 21, 22, 23, 24., 70, 73, 75, 86
3059	12, 17, 19, 20, 70, 73
3060	19, 20, 72, 73, 75
3061	19, 20, 72, 73, 86
3062	19, 20, 22, 70, 73, 75
3063	17, 19, 20, 22, 24, 48, 57, 62, 65, 70, 73, 75
3064	17, 19, 20, 22, 24, 25, 52, 70, 73, 74, 75, 86
3065	17, 19, 20, 22, 25, 70, 73, 75, 86
3066	19, 20, 22, 24, 31, 43, 48, 62, 70, 73, 75
3067	17, 19, 20, 22, 24, 31, 52, 65, 70, 73, 75, 86
3068	17, 19, 20, 22, 25, 31, 65, 70, 73, 75, 86
3069	13, 17, 19, 20, 22, 31, 70, 73, 75
3070	17, 19, 20, 25, 70, 75, 78
3071	17, 19, 20, 70, 75, 78
3072	19, 22, 28, 67, 68, 70, 73, 75
3073	17, 70, 73, 75, 88, 89, 90, 92, 106, 107
3074	17, 19, 20, 21, 22, 24, 70, 73, 75, 86
3075	13, 17, 19, 20, 21, 31, 42, 44, 48, 70, 73, 75
3076	17, 19, 20, 22, 25, 65, 70, 73, 75, 86
3077	17, 19, 20, 21, 44, 70, 73, 75
3078	17, 83, 104
3079	19, 20, 21, 22, 31, 43, 70, 73, 75, 86
3080	70, 73, 75, 88, 90, 91, 92
3081	13, 32, 70, 73, 75, 87, 88, 91, 92, 105, 106, 107
3082	13, 32, 70, 73, 75, 79, 87, 88, 89, 90, 92, 105, 196, 107
3083	17, 70, 73, 75, 83, 88, 90, 91
3084	70, 73, 75, 81, 85, 88, 90, 92, 106, 107
3085	13, 17, 19, 20, 22, 31, 44, 70, 73, 75
3086	17, 70, 73, 75, 81, 88, 104
3087	70, 78
3088	19, 20, 22, 31, 70, 73, 75, 86
3089	17, 19, 20, 31, 44, 70, 75, 78
3090	61, 65, 86
3091	24, 61, 65, 86
3092	65, 67, 68, 70, 73, 75
3093	17, 19, 20, 22, 60, 70, 73, 75
3094	13, 19, 20, 21, 22, 23, 24, 70, 73, 75
3095	17, 19, 20, 22, 25, 31, 44, 70, 73, 75
3096	17, 19, 20, 22, 31, 56, 70, 73, 75
3097	17, 70, 73, 88, 112, 117
3098	17, 70, 73, 87, 88, 91, 103, 106, 107, 112, 117
3099	19, 20, 21, 22, 23, 24, 62, 70, 73, 75
3100	17, 28, 70, 73, 81, 87, 88, 91, 112, 117
3101	70, 73, 85, 87, 88, 90, 112, 117
3102	17, 19, 20, 22, 65, 70, 73, 74, 75, 86
3103	25, 31, 56, 67, 68, 69, 70, 73, 75, 86
3104	65, 70, 73, 86
3105	70, 73, 81, 88, 112, 117
3106	13, 32, 70, 73, 87, 88, 89, 90, 91, 92, 93, 103, 112, 117
3107	70, 73, 87, 88, 89, 90, 91, 92, 104, 112, 117
3108	70, 73, 81, 87, 88, 89, 90, 91, 92, 104, 112, 117
3109	70, 73, 79, 87, 88, 89, 90, 91, 92, 104, 112, 117
3110	70, 73, 81, 87, 88, 89, 90, 92, 103, 112, 117
3111	17, 70, 73, 87, 88, 91, 112, 117
3112	17, 28, 70, 73, 83, 92, 103, 112, 114, 115, 117
3113	17, 70, 73, 81, 88, 112, 117
3114	12, 13, 17, 19, 20, 21, 23, 48, 70, 73
3115	12, 17, 19, 20, 21, 23, 44, 70, 73, 86
3116	12, 17, 19, 20, 21, 31, 43, 44, 70, 73, 86
3117	17, 19, 20, 22, 24, 25, 31, 70, 73, 75, 86
3118	17, 19, 20, 22, 24, 25, 31, 56, 70, 73, 75, 86
3119	17, 19, 20, 25, 31, 44, 70, 75, 78
3120	13, 17, 32, 70, 73, 79, 80, 88, 89, 90, 91, 92, 93, 106, 107, 112, 117
3121	17, 19, 20, 21, 23, 24, 48, 65, 70, 73, 75, 86
3122	19, 20, 21, 22, 57, 72, 73, 75
3123	17, 70, 73, 87, 88, 89, 90, 112, 117
3124	70, 73, 87, 88, 89, 90, 91, 92, 103, 112, 117
3125	70, 73, 79, 80, 88, 90, 92, 93, 105, 112, 117
3126	13, 32, 70, 73, 81, 87, 88, 89, 90, 91, 92, 104, 112, 117
3127	13, 32, 70, 73, 88, 90, 92, 104, 112, 117
3128	13, 17, 32, 70, 73, 85, 88, 89, 90, 92, 103, 112, 117
3129	13, 19, 20, 21, 70, 73, 75
3130	17, 70, 73, 81, 85, 88, 89, 90, 92, 104, 112, 117
3131	17, 70, 73, 81, 85, 88, 89, 90, 92, 93, 104, 106, 107, 112, 117
3132	17, 70, 73, 85, 87, 88, 90, 92, 104, 112, 117
3133	70, 73, 99, 101
3134	13, 17, 32, 70, 73, 81, 85, 88, 89, 90, 92, 104, 112, 117
3135	17, 70, 73, 85, 87, 88, 90, 112, 117
3136	17, 70, 73, 79, 85, 87, 88, 90, 112, 117
3137	12, 19, 55, 70, 73
3138	13, 17, 32, 70, 73, 79, 81, 84, 85, 87, 88, 89, 90, 92, 104, 112, 117
3139	17, 70, 73, 81, 82, 84, 85, 88, 90, 91, 92, 93, 104, 112, 117
3140	17, 70, 73, 84, 85, 87, 88, 90, 92, 104, 112, 117
3141	13, 17, 32, 70, 73, 79, 84, 85, 88, 89, 90, 92, 104, 112, 117
3142	17, 70, 73, 84, 85, 87, 88, 90, 93, 105, 112, 117
3143	13, 32, 70, 73, 88, 89, 90, 105, 112, 117
3144	13, 17, 32, 70, 73, 81, 82, 84, 85, 88, 90, 91, 92, 93, 104, 112, 117
3145	19, 21, 22, 24, 67, 68, 70, 73, 75, 86
3146	19, 21, 22, 24, 67, 68, 70, 73, 75
3147	17, 19, 20, 22, 25, 65, 70, 73, 74, 75, 86
3148	17, 70, 73, 85, 90, 106, 112, 117
3149	19, 20, 22, 23, 24, 48, 62, 70, 73, 75
3150	17, 19, 20, 65, 75
3151	17, 19, 20, 22, 24, 65, 70, 73, 75
3152	19, 20, 21, 31, 43, 48, 62, 70, 73, 75
3153	25, 31, 67, 68, 69, 70, 73, 75
3154	13, 19, 32, 67, 68, 70, 73, 75, 86
3155	70, 73, 88, 90, 91, 92, 103, 106, 107, 112, 117
3156	17, 70, 73, 81, 85, 88, 90, 106, 112, 117
3157	19, 20, 21, 22, 75
3158	19, 20, 22, 31, 43, 48, 62, 70, 73, 75
3159	21, 22, 25, 67, 68, 69, 70, 73, 75, 86
3160	19, 21, 22, 25, 67, 68, 69, 70, 73, 75, 86
3161	13, 17, 32, 70, 73, 88, 91, 92, 112, 117
3162	17, 70, 73, 88, 91, 112, 117
3163	17, 70, 73, 88, 90, 91, 112, 117
3164	17, 28, 55, 70, 73, 81, 84, 88, 91, 106, 107, 112, 117
3165	17, 19, 20, 22, 24, 31, 70, 73, 75, 86
3166	17, 28, 70, 73, 87, 88, 90, 91, 112, 117
3167	13, 17, 32, 70, 73, 87, 88, 89, 91, 93, 112, 117
3168	17, 70, 73, 87, 88, 89, 91, 93, 112, 117
3169	17, 70, 73, 87, 88, 89, 90, 91, 92, 93, 104, 112, 117
3170	17, 81, 112
3171	17, 70, 78, 79, 87, 88, 91, 103, 112, 117
3172	13, 22, 32, 67, 68, 70, 73, 75, 86
3173	19, 20, 21, 44, 48, 70, 73, 75, 86
3174	13, 17, 32, 70, 73, 81, 84, 85, 87, 88, 89, 90, 92, 104, 112, 117

Special Fitments Code—*continued*

Code No.	Code Number Singles
3175	13, 17, 32, 70, 73, 84, 85, 88, 89, 90, 92, 104, 112, 117
3176	57, 67, 68, 70, 73, 75
3177	17, 19, 20, 31, 44, 70, 73, 75
3178	21, 31, 62, 67, 68, 70, 73, 75
3179	17, 79, 81
3180	17, 28, 70, 73, 87, 88, 91, 93, 112, 117
3181	17, 70, 73, 88, 91, 92, 103, 112, 117
3182	17, 19, 20, 22, 24, 25, 31, 56, 70, 73, 75
3183	19, 21, 22, 67, 68, 70, 73, 75, 86
3184	17, 70, 73, 87, 88, 90, 92, 103, 106, 107, 112, 117
3185	17, 70, 73, 81, 84, 85, 88, 92, 104, 112, 117
3186	13, 17, 32, 70, 73, 79, 85, 87, 88, 89, 92, 103, 112, 117
3187	13, 17, 32, 70, 73, 84, 85, 87, 88, 89, 90, 92, 104, 112, 117
3188	17, 70, 73, 88, 89, 90, 112, 117
3189	19, 25, 67, 68, 69, 70, 73, 75, 86
3190	19, 28, 44, 67, 68, 70, 73, 75, 86
3191	13, 17, 19, 20, 22, 70, 73, 75
3192	12, 13, 19, 20, 32, 71, 73, 86
3193	13, 19, 20, 21, 44, 48, 70, 73, 75, 86
3194	17, 70, 73, 79, 81, 88, 89, 90, 92, 104, 112, 117
3195	13, 17, 32, 70, 73, 79, 88, 89, 90, 92, 104, 112, 117
3196	13, 17, 32, 70, 73, 79, 87, 88, 89, 90, 92, 103, 112, 117
3197	13, 19, 20, 31, 32, 71, 73, 75, 86
3198	21, 31, 42, 67, 68, 70, 73, 75
3199	13, 19, 20, 21, 22, 23, 48, 70, 73, 75, 86
3200	17, 70, 73, 79, 87, 88, 90, 91, 93, 106, 107, 112, 117
3201	13, 19, 21, 22, 32, 67, 68, 70, 73, 75
3202	17, 70, 73, 85, 87, 88, 90, 92, 104, 112, 117
3203	17, 70, 73, 87, 88, 90, 92, 103, 106, 107, 112, 113, 117
3204	13, 17, 19, 20, 22, 24, 31, 52, 65, 70, 73, 75
3205	17, 19, 20, 22, 31, 43, 65, 70, 73, 75, 86
3206	17, 19, 20, 21, 22, 24, 57, 62, 65, 70, 73, 75, 86
3207	13, 17, 19, 20, 21, 23, 24, 48, 70, 73, 75
3208	17, 70, 73, 88, 90, 112, 117
3209	13, 17, 32, 70, 73, 81, 84, 88, 92, 93, 104, 112, 117
3210	17, 70, 73, 79, 88, 90, 92, 104, 112, 117
3211	17, 70, 73, 87, 88, 89, 112, 117
3212	13, 17, 32, 70, 73, 85, 87, 88, 91, 93, 112, 117
3213	19, 22, 25, 67, 68, 69, 70, 73, 75, 86
3214	17, 70, 73, 88, 103, 112, 117
3215	17, 28, 70, 73, 81, 88, 103, 115, 116, 117
3216	17, 70, 73, 75, 87, 88, 92, 103
3217	13, 17, 32, 70, 73, 75, 87, 88, 91, 92, 93, 103
3218	17, 70, 73, 88, 89, 92, 93, 112, 115, 117
3219	13, 32, 70, 73, 75, 79, 80, 81, 87, 88, 89, 90, 91, 92, 93, 103, 106, 107
3220	13, 32, 70, 73, 79, 80, 81, 87, 88, 90, 91, 92, 104, 106, 112, 117
3221	17, 19, 20, 23, 65, 70, 73, 75
3222	13, 17, 19, 20, 21, 22, 24, 48, 57, 61, 62, 65, 70, 73, 75, 86
3223	17, 70, 73, 84, 85, 87, 88, 89, 90, 92, 104, 112, 117
3224	19, 22, 31, 42, 67, 68, 70, 73, 75, 86
3225	13, 17, 19, 20, 21, 23, 24, 48, 75
3226	19, 20, 21, 72, 73, 75
3227	13, 19, 20, 21, 63, 70, 73, 75
3228	21, 31, 42, 67, 68, 70, 73, 75, 86
3229	19, 20, 25, 70, 73, 86
3230	22, 65, 67, 68, 70, 73, 75
3231	22, 65, 67, 68, 70, 73, 75, 86
3232	17, 70, 73, 88, 90, 91, 93, 112, 117
3233	17, 70, 73, 81, 88, 90, 112, 117
3234	19, 44, 67, 68, 70, 73, 75
3235	22, 23, 62, 67, 68, 70, 73, 75, 86
3236	25, 70, 73, 86
3237	13, 19, 21, 22, 32, 67, 68, 70, 73, 75, 86
3238	25, 65, 70, 73, 86
3239	13, 17, 32, 70, 73, 79, 80, 87, 88, 89, 90, 92, 105, 106, 112, 117
3240	17, 70, 73, 81, 87, 88, 89, 90, 105, 112, 117
3241	13, 17, 32, 70, 73, 81, 85, 88, 90, 92, 104, 112, 117
3242	17, 70, 73, 85, 88, 90, 92, 104, 112, 117
3243	17, 70, 73, 81, 85, 88, 90, 92, 104, 112, 117
3244	19, 44, 48, 70, 73
3245	19, 20, 21, 22, 31, 43, 72, 73, 86
3246	13, 19, 20, 21, 22, 31, 43, 44, 48, 70, 73, 75, 86
3247	86, 101, 102
3248	17, 70, 73, 88, 89, 90, 92, 93, 112, 117
3249	17, 80
3250	22, 44, 62, 67, 68, 70, 73, 75
3251	21, 22, 25, 67, 68, 69, 70, 73, 75
3252	19, 20, 25, 70, 73, 75, 86
3253	13, 19, 20, 22, 25, 70, 73, 75, 86
3254	19, 20, 21, 24, 31, 43, 48, 70, 73, 75, 86
3255	17, 19, 20, 22, 65, 70, 73, 74, 75
3256	17, 70, 73, 85, 88, 90, 112, 117
3257	17, 19, 20, 22, 24, 25, 70, 73, 75, 86
3258	55, 67, 68, 70, 73, 75, 86
3259	17, 70, 73, 81, 88, 89, 103, 112, 117
3260	17, 28, 70, 73, 81, 84, 88, 89, 103, 106, 107, 112, 115, 116, 117
3261	17, 28, 70, 73, 87, 88, 91, 112, 117
3262	17, 70, 73, 81, 87, 88, 89, 91, 92, 93, 112, 117
3263	57, 70, 73, 88, 90, 112, 117
3264	17, 70, 73, 79, 81, 88, 90, 112, 117
2265	17, 19, 20, 22, 24, 52, 65, 70, 73, 75, 86
3266	17, 112
3267	13, 17, 32, 70, 73, 81, 88, 89, 90, 92, 103, 112, 113, 117
3268	17, 70, 83, 81, 88, 89, 90, 92, 93, 112, 113, 117
3269	17, 70, 73, 81, 88, 89, 90, 92, 103, 112, 113, 117
3270	17, 70, 73, 87, 88, 89, 90, 91, 93, 112, 117
3271	17, 28, 70, 73, 84, 88, 90, 106, 107, 112, 117
3272	17, 28, 70, 73, 81, 84, 88, 90, 106, 107, 112, 117
3273	17, 28, 70, 73, 81, 84, 88, 90, 92, 93, 106, 107, 112, 117
3274	17, 70, 73, 81, 88, 92, 93, 112, 117
3275	17, 19, 20, 21, 25, 31, 44, 70, 73
3276	17,19, 20, 21, 22, 24, 25, 31, 44, 70, 73, 75, 86
3277	20, 65, 75, 86
3278	20, 65, 75
3279	20, 25, 65, 75
3280	19, 44, 48, 65, 70, 73
3281	17, 70, 73, 87, 88, 91, 105, 112, 117
3282	17, 28, 70, 73, 88, 112, 115, 117
3283	17, 70, 73, 87, 88, 89, 91, 93, 103, 112, 117
3284	70, 73, 87, 88, 89, 90, 91, 93, 105, 112, 117
3285	17, 70, 73, 88, 92, 103, 112, 117
3286	17, 70, 73, 88, 92, 104, 112, 117
3287	13, 17, 32, 70, 73, 81, 88, 92, 104, 112, 117
3288	13, 32, 70, 73, 87, 88, 89, 112, 117
3289	70, 73, 88, 89, 112, 117
3290	17, 70, 73, 81, 88, 89, 90, 91, 92, 105, 112, 117
3291	17, 70, 73, 81, 87, 88, 89, 90, 91, 93, 105, 112, 117
3292	19, 20, 25, 44, 65, 70, 73
3293	17, 70, 73, 87, 88, 89, 91, 112, 117, 118
3294	17, 28, 70, 73, 81, 87, 88, 91, 93, 106, 112, 117, 118, 119
3295	17, 28, 70, 73, 79, 81, 88, 112, 117
3296	17, 70, 73, 81, 88, 106, 107, 112, 117, 118
3297	17, 70, 73, 81, 88, 89, 104, 112, 117
3298	19, 31, 62, 67, 68, 70, 73, 75

Alphabetical Index

Page

A

Air cleaner .. .. MD 4, MD 5
Abutment—brake .. .. MF 31
Actuating unit—brake .. MF 33, MR 68
Adjuster unit—brake .. .. MF 30
Ammeter .. .. ML 2
Arm—Hydraulic lift .. .. MR 24
Arm—Radius .. .. MR 58·1
Arm—track rod .. .. MH 5, MH 5
Axle shafts
4DM .. .. MF 20
3DL, 4DM, 342, 460 .. .. MF 21
342, 460 .. .. MF 24
10/42, 10/60 .. .. .. MF 27

B

Battery cables .. ..MK 1·1, MK 4
Battery tray .. .. .. MN 4
Badge—B.M.C. diesel .. .. MN 1·1
Beam—front axle.. .. MH 1, MH 3
Belt pulley unit .. MR 31·1, MR 33
Bonnet .. .. MN1·1
Box—control .. .. .. MK 7
Bracket—brake pedal support MJ 1, MJ 6
Bracket—lamp fixing .. MR 44, MR 52
Brake abutment .. .. .. MF 31
Brake actuating unit .. MF 33, MR 68
Brake adjuster unit .. .. MF 30
Brake bisector and fork .. .. MR 69
Brake drum
MF 30, MF 32, MR 67, MR 69
Brake expander unit
MF 30, MF 32, MR 67, MR 69
Brake friction disc .. MF 33, MR 68
Brake shoes
MF 30, MF 31, MR 67, MR 69

C

Cables—battery .. ..MK 1·1, MK 4
Cables—lighting ..MR 46, MR 47, MR 53
Cables—tractometer drive ML 4, MR 57
Cap—fuel filler .. .. .. MD 1
Cap—radiator filler .. MC 1, MC 4
Carrier—i.p.t.o. clutch withdrawal MS 1·1
Casing—gearbox .. .. MF 3, MF 4
Casing—hydraulic power unit .. MR 5
Casing—power take-off unit
MR 1·1, MR 3
Casing—power take-off and depth control unit .. .. MR 8·1
Cleaner—air .. .. MD 4, MD 5
Clutch pedal .. .. ME 1, MS 1·1
Clutch withdrawal carrier .. MS 1
Clutch and steering housing .. MF 2
Column—steering .. .. MG 1, MG 2
Control box .. .. .. MK 7
Control—engine stop .. ML 1, ML 4
Control—radiator shutter .. MC 6
Control—starter .. .. .. MK 6
Control valve—vacuum braking .. MR 75
Conversion kit—1000 to 2000 p.s.i. system .. .. MR 14
Conversion kit—category I implements .. .. MR 26
Coupling—quick detachable .. MR 76
Clutch unit—hand .. .. MR 34
Cross-shaft housing .. .. MR 23
Cross-shaft levers .. .. .. MR 23
Cross-shaft—steering .. MG 1, MG 4
Crown wheel and mainshaft
Basic gearbox .. .. MF 9, MF 16
i.p.t.o. gearbox .. .. MS 6, MS 11

D

Dash lamp .. .. ML 1
Direct coupled unit—power steering .. .. MR 80
Draglink—steering
basic .. .. MH 6
power steering .. .. .. MR 81
'V' twin axle .. .. .. MR 38
Draft link .. .. MR 26
Drive pulley—power steering MR 78·1
Driver seat and cushion .. .. MN 5
Drop arm—steering .. MG 1, MG 4
Drum—brake
MF 30, MF 32, MR 67, MR 69

E

Engine stop control .. ML 1, ML 4
Exhaust pipe .. .. .. MA 1·1
Exhauster—vacuum braking .. MR 72
Expander unit—brake
MF 30, MF 32, MR 67, MR 69
Extension—air cleaner .. MD 4, MD 5
Extension—mudguard .. .. MN 3
Extension—silencer .. .. MA 1·1

F

Filter—fuel—bowl type .. .. MD 3
Filter—pencil—fuel tank .. MD 1
Floodlamp—rear MR 40·1, MR 49
Floor plate—tractor .. .. MN 8
Footbrake shaft levers .. MJ 1, MJ 6
Frame—main .. .. .. MF 1·1
Friction disc—brake .. MF 33, MR 68
Front wheel hub
basic .. .. .. MH 1, MH 4
'V' twin axle .. .. .. MR 37
Front wheels .. .. .. MM 3
Fuel filler cap .. .. .. MD 1
Fuel filter—bowl type .. .. MD 3
Fuel pipes .. .. MD 2
Fuel tank .. .. MD 1

G

Gasket—exhaust pipe .. .. MA 1·1
Gauge—oil .. .. .. ML 3, ML 4
Gear—hydraulic pump drive
MR 14·1—MR 16
Gear—p.t.o. driven .. MS 7, MS 12
Gear—p.t.o. driving .. MS 5, MS 10
Gears—layshaft
MF 10, MF 16, MS 7, MS 12
Gears—mainshaft
MF 9, MF 15, MS 6, MS 11
Gears—reverse
MF 10, MF 16, MS 7, MS 12
Gearbox casing .. .. MF 3, MF 4
Gearbox selectors
MF 11, MF 17, MS 9, MS 14
Guards—fan blade .. .. MN 6

H

Harness—wiring .. .. MK 2—MK 5
Headlamps .. MR 40·1, MR 49
Headlamps—France .. MR 41, MR 50
Headlamps—Netherlands MR 41, MR 50
Holder—licence .. .. .. MN 7
Horn .. .. MR 55
Horn push .. .. .. ML 3, ML 4
Housing—clutch and steering .. MF 2
Housing—cross-shaft .. .. MR 23
Housing—i.p.t.o. transfer MS 5, MS 10
Hub—front axle
basic .. .. .. MH 1, MH 4
'V' twin axle .. .. .. MR 37
Hub—rear sliding .. .. .. MF 29
Hydraulic levers .. .. .. MR 22
Hydraulic power unit casing .. MR 5·1
Hydraulic pump .. MR 14·1—MR 16
Hydraulic pipes .. .. MR 20, MR 21
Hydraulic valve .. MR 17—MR 19

I

Illumination lamp .. .. MR 51
Instrument panel .. .. ML 1, ML 4

J

Joint—axle end cover .. MF 22, MF 24, MF 27, MR 62, MR 63, MR 65
Joint—brake housing .. MF 27, MR 65
Joint—gearbox front cover MF 6, MF 13
Joint—gearbox rear cover .. MF 6
Joint—front hub cap .. MH 1, MH 4
Joint—steering box cover .. MG 1
Joint—steering column .. .. MG 4
Joint—transfer gear housing .. MS 5

K

Kit—conversion—category I implements .. .. .. MR 26
Kit—conversion—1000 to 2000 p.s.i. system .. .. MR 14·1

L

Lamp—stop tail .. .. .. MR 43
Latch—parking .. .. .. MJ 5
Layshaft
basic gearbox .. .. MF 10, MF 16
i.p.t.o. gearbox .. .. MS 7, MS 12
Layshaft gears
MF 10, MF 16, MS 7, MS 12
Lever—footbrake shaft .. MJ 1, MJ 6
Lever—Throttle
basic .. .. MA 2
road speed control .. .. MR 84
Levers—cross-shaft .. .. MR 33
Levers—hydraulic .. .. MR 22
Licence holder .. .. .. MN 7
Lift arms—hydraulic .. .. MR 24
Lift rods—hydraulic .. MR 27, MR 28
Lighting cables MR 46, MR 47, MR 53
Lighting switch .. .. ML 2, ML 4
Link—draft .. .. .. MR 26
Link—upper .. .. .. MR 25
Linkage—brake .. .. MJ 1, MJ 6
Locking plunger—road speed control .. .. MR 83

M

Main axle beam .. .. .. MH 1
Main frame .. .. .. MF 1·1
Main fuel filter—additional .. MR 39
Mainshaft and crown wheel
basic gearbox .. .. MF 9, MF 15
i.p.t.o. gearbox .. .. MS 6, MS 11
Mainshaft gears MF 9, MF 15, MS 6, MS 11
Mid-mounted drawbar .. .. MO 1·1
Mounting step—tractor .. .. MN 5
Mudguard .. .. MN 3

N

Nameplate—tractor .. .. MN 2
Number plates .. .. .. MN 6

O

Oil gauge .. .. .. ML 3, ML 4
Oil separator—vacuum braking .. MR 73
Overload release unit .. .. MR 35

P

Paint .. .. MP 2
Panel—instrument .. ML 1, ML 4
Panel—tractor side .. .. MN 7
Parking brake latch .. .. MJ 5
Pedal—brake .. .. MJ 1, MJ 6
Pedal—clutch .. .. ME 1, MS 1·1
Pencil filter—fuel tank .. .. MD 1
Pinion—bevel .. .. .. MF 8
Pipe—exhaust .. .. .. MA 1·1
Pipes—fuel .. .. .. MD 2
Pipes—hydraulic .. .. MR 20, MR 21
Pipes—power steering .. .. MR 81
Pipes—radiator water .. .. MC 5
Pipes—vacuum braking .. .. MR 77
Piston—hydraulic cylinder
MR 14—MR 16
Plate—floor .. .. .. MN 8
Plunger—locking—road speed control .. .. MR 83
Power steering .. .. MR 78·1
Power take-off unit casing
MR 1·2—MR 3
P.T.O. and depth control unit casing .. .. MR 8·1
P.T.O. shaft .. MR 1·2—MR 5·1
Pulley—drive—power steering MR 78·1

Alphabetical Index—*continued*

	Page
Pulley unit—belt	MR 31·1, MR 33
Pump—hydraulic	MR 14·1—MR 16
Pump—rotor—power steering	MR 78·1
Q	
Quick detachable coupling	MR 76
R	
Radiator	MC 1, MC 2
Radiator case	MN 1·1
Radiator filler cap	MC 1, MC 4
Radiator shutter control	MC 6
Radiator water pipes	MC 5
Radius arms	MR 58·1
Rear axle	MF 20—MF 27
Rear axle sliding hub	MF 29
Rear wheels	MM 1
Release unit—overload	MR 35
Reservoir—power steering	MR 79
Reservoir—vacuum braking	MR 74
Reverse gear	
basic gearbox	MF 10, MF 16
i.p.t.o. gearbox	MS 7, MS 12
Road speed control	MR 82·1
Rod—lift—hydraulic	MR 27, MR 28
Rod—throttle control	MA 3, MR 85
Rod—track—steering	MH 2, MH 5
Rotor pump—power steering	MR 78·1
S	
Seat—driver	MN 5
Selectors—gearbox	
basic	MF 11, MF 17
i.p.t.o.	MS 9, MS 14
road speed control	MR 82·1
Separator—oil—vacuum braking	MR 73
Shaft—axle	
4DM	MF 20
3DL, 4DM, 342, 460	MF 21
342, 460	MF 24
10/42, 10/60	MF 27
Shaft—clutch pedal	ME 1
Shaft—power take-off	MR 1·1—MR 5·1
Shaft—primary—i.p.t.o. main drive	MS 7, MS 10
Shaft—transmission	MF 8, MF 14
Silencer	MA 1·1
Side lamp	MR 42, MR 51
Side panel—tractor	MN 7
Sliding hub—rear	MF 29
Stabiliser	MR 29, MR 30
Starter control	MK 6
Starter key switch	ML 3
Starter solenoid switch	MK 6
Steering column	MG 1, MG 2
Steering cross-shaft	MG 1, MG 4
Steering drop arm	MG 1, MG 4
Steering—power assisted	MR 78·1
Step—tractor mounting	MN 5
Stop tail lamp	MR 43
Strake—wheel	MM 5
Switch—lighting	ML 2, ML 4
Switch—starter solenoid	MK 6
Switch—starter key	ML 3
T	
Tachometer	MR 56·1
Tail lamp	MR 42, MR 51
Tandem pump—hydraulic	MR 16
Tank—fuel	MD 1
Thermometer	ML 3, ML 4
Throttle control rod	MA 3, MR 85
Throttle lever	MA 2, MR 84
Toolbox	MN 6
Tools	MP 1
Track rod—steering	MH 2, MH 5
Track rod arm	MH 2, MH 5
Tractor mounting step	MN 5
Tractometer	ML 4, MR 56·1
Tractometer cable	ML 4, MR 57
Trailer braking equipment	MR 72
Transfer gear housing	MS 5, MS 10
Tray—battery	MN 4
V	
Vacuum reservoir	MR 74
Valve—control—vacuum braking	MR 75
Valve—hydraulic lift	MR 17—MR 19
'V' twin axle	MR 36
W	
Weights—wheel	MM 6
Wheel strakes	MM 5
Wheels—front	MM 3
Wheels—rear	MM 1
Wiring harness	MK 2—MK 5

Part Number Index

The following is a complete index of parts in this List, giving the page reference of each part number

Part Number	Page
AAA 81	MR 80
AAA 81	MR 80·1
AAA 1272	MG 1
AAA 1272	MG 4
AAA 4411	MJ 4
AAA 6009§	MF 30
AAA 6010§	MF 30
AAA 6011§	MF 30
AAA 6012§	MF 30
AAA 6013§	MF 30
AAA 6014§	MF 30
AAA 6015§	MF 30
AAA 6016§	MF 30
AAA 6018§	MF 30
AAA 6020§	MF 30
AAA 6021§	MF 30
AAA 6023§	MF 30
AAA 6027§	MH 6
AAA 6027	MR 38
AAA 6027§	MR 81
AAA 6027	MR 81·1
AAA 6071§	MN 2
AAA 6072§	MN 5
AAA 6073§	MR 5·1
AAA 6075§	MF 30
AAA 6079§	MR 48
AAA 6079§	MR 48·1
AAA 6081§	ML 3
AAK 9	MR 39·1
AAK 10	MR 39·1
AAK 372	MR 39·1
AAK 3000	MJ 4
AAK 3000	MJ 7
AAK 3000	MR 70
AAK 3002	MJ 4
AAK 3002	MJ 7
AAK 3002	MR 70
AAK 3003	MJ 4
AAK 3003	MJ 7
AAK 3003	MR 70
AAK 3004	MJ 4
AAK 3004	MJ 7
AAK 3004	MR 70
AAK 3005	MJ 4
AAK 3005	MJ 7
AAK 3005	MR 70
AAK 3008	MJ 4
AAK 3008	MJ 7
AAK 3008	MR 70
AAK 3009	MJ 7
AAK 3009	MR 70
AAK 5328	MJ 4
AAK 5328	MJ 7
AAK 5328	MR 70
AAK 5329	MJ 4
AAK 5329	MJ 7
AAK 5329	MR 70
ADP 108	MR 33
ADP 116	MR 5
ADP 116	MF 21
ADP 116	MF 24
ADP 116	MF 27
ADP 116	MR 61·1
ADP 116	MR 63
ADP 116	MR 65
ADP 212	MF 2
AEC 350	MA 1·1
AHH 5362	ML 2
AHH 5362	MR 45
AHH 5362	MR 48
AJA 5045	MR 43
AJA 5045	MR 48
AJD 1204Z	MR 45
AJD 1204Z	MR 48
AJD 1242Z	MN 5
AJD 3202Z	MR 40·1
AJD 3205Z	MK 7
AJD 3408N	MR 55
AJD 6254N	MF 30
AJD 7192	MM 2
AJD 7192	MM 4
AJD 7252	MJ 1
AJD 7722	MR 13
AJD 7722	MR 13·2
AJD 7722	MR 45
AJD 7722	MR 52
AJD 7722	MR 84
AJD 7722N	MA 2
AJD 7722N	MN 2
AJD 7722N	MN 6
AJD 7731	MJ 4
AJD 7731	MJ 5
AJD 7731	MR 70
AJD 7732	MK 6
AJD 7791N	MR 1·2
AJD 8012Z	MK 6
AJD 8052Z	MK 6
AJD 8052Z	ML 2
AJD 8104Z	MR 75
AJD 8105Z	MR 75
AJD 8107N	MJ 1
AJD 8134Z	MF 30
AJD 8205Z	MK 6
AJD 8405N	MR 80
AJD 8405N	MR 80·1
AJH 5184	ML 3
AKJ 2327	MP 2
AKJ 2328	MP 2
AKJ 2330	MP 2
AKJ 2331	MP 2
AKJ 2332	MP 2
AKJ 2344	MP 2
AKJ 2345	MP 2
AKJ 2347	MP 2
AKJ 2348	MP 2
AKJ 2349	MP 2
AKJ 3304	MP 2
AKJ 3305	MP 2
AMK 158	MD 5
AMK 602	MF 27·1
AMK 602	MR 65
AMK 802	MD 5
AMK 1275	MR 39·1
AMK 3213	MJ 4
AMK 3213	MJ 7
AMK 3213	MR 70
AMK 3213	MR 70
AMK 3214	MJ 4
AMK 3214	MJ 7
AMK 3214	MR 70
AMK 3131	MS 12
AMK 4134	MH 1
AMK 4134	MH 4
AMK 4134	MR 36
AMK 4134	MR 37
AMK 5028	MA 1·1
AMK 7177	MR 36
AMK 9989	MP 1
ANZ 103	MR 52
ARA 951	MC 1·1
ARA 951	MC 2
ARJ 2§	MC 2
ARJ 7§	MA 1
ARJ 11§	MN 1·1
ARJ 15§	MC 1·1
ARJ 17§	MD 1
ARJ 19§	MN 2
ARJ 24§	MC 2
ARJ 26§	MC 1·1
ARJ 29§	MC 1·1
ARJ 30§	MC 2
ARJ 31§	MA 1·1
ARJ 33§	MA 1·1
ARJ 501§	MC 4
ARJ 502§	MC 4
ARJ 506§	MC 4
ARJ 507§	MC 4
ARJ 508§	MC 4
ARJ 514§	MC 4
ARJ 515§	MC 4
ARJ 519§	MC 4
ARJ 556§	MC 3
ARJ 557§	MC 1·1
ARJ 557§	MC 3
ARJ 565§	MN 1·1
ARJ 565§	MN 2
ARJ 566§	MN 1·1
ARJ 570§	MN 1·1
ARJ 571§	MN 1·1
ARJ 571§	MN 2
ARJ 572§	MN 1·1
ARJ 572§	MN 2
ARJ 573§	MN 1·1
ARJ 573§	MN 2
ARJ 574§	MN 1·1
ARJ 574§	MN 2
ARJ 575§	MN 1·1
ARJ 575§	MN 2
ARJ 577§	MN 1·1
ARJ 578§	MN 1·1
ARJ 593§	MN 1·1
ARJ 602§	MD 1
ARJ 616§	MC 1·1
ARJ 618§	MC 1·1
ARJ 618§	MC 4
ARJ 654§	MN 2
ARJ 656§	MN 2
ARJ 659§	MN 2
ARJ 660§	MN 2
ARJ 662§	MN 2
ARJ 668§	MC 1·1
ARJ 668§	MC 3
ARJ 685§	MC 1·1
ARJ 685§	MC 4
ARJ 690§	MC 1·1
ARJ 690§	MC 2
ARJ 692§	MC 1·1
ARJ 692§	MC 3
ATB 4098	MR 33
ATC 7513	MF 7
ATJ 51§	ML 1
ATJ 61§	MR 56·1
ATJ 63§	MR 56·1
ATJ 65§	MR 56·1
ATJ 70§	MR 72·1
ATJ 70§	MR 78·1
ATJ 71§	MR 72·1
ATJ 71§	MR 78·1
ATJ 74§	MC 4
ATJ 75§	MC 5
ATJ 107	MR 78·1
ATJ 1000§	MF 20
ATJ 1000§	MF 22
ATJ 1000§	MF 24
ATJ 1000§	MF 27·1
ATJ 1000§	MR 61·1
ATJ 1000§	MR 63
ATJ 1000§	MR 65
ATJ 1001§	MA 1·1
ATJ 1002§	MR 13·2
ATJ 1002§	MR 14·1
ATJ 1002§	MR 15
ATJ 1002§	MR 16
ATJ 1003§	MF 11
ATJ 1003§	MF 14
ATJ 1003§	MF 17
ATJ 1003§	MR 82·1
ATJ 1003§	MS 9
ATJ 1003§	MS 10
ATJ 1003§	MS 14
ATJ 1004§	MF 12
ATJ 1004§	MF 17
ATJ 1004§	MR 82·1
ATJ 1004§	MS 9
ATJ 1004§	MS 14
ATJ 1005§	MF 3
ATJ 1005§	MS 2
ATJ 1006§	MS 25
ATJ 1006§	MR 34
ATJ 1006§	MR 59·1
ATJ 1006§	MR 60
ATJ 1006§	MR 64
ATJ 1007§	MF 18
ATJ 1007§	MF 19
ATJ 1007§	MS 8
ATJ 1007§	MS 13
ATJ 1008§	MR 44
ATJ 1008§	MR 48
ATJ 1009§	MF 11
ATJ 1009§	MF 17
ATJ 1009§	MR 82·1
ATJ 1009§	MS 9
ATJ 1009§	MS 14
ATJ 1010§	MC 5
ATJ 1011§	MC 6
ATJ 1012§	MS 1·1
ATJ 1013§	MR 13·2
ATJ 1013§	MR 14·1
ATJ 1013§	MR 15
ATJ 1013§	MR 16
ATJ 1014§	MF 30
ATJ 1014§	MF 32
ATJ 1014§	MR 67
ATJ 1015§	MR 13·2
ATJ 1015§	MR 15
ATJ 1015§	MR 16
ATJ 1016§	MO 3
ATJ 1016§	MO 4
ATJ 1016§	MO 5
ATJ 1017§	MS 7
ATJ 1018§	MS 5
ATJ 1018§	MS 10
ATJ 1020§	MF 10
ATJ 1020§	MF 16
ATJ 1020§	MS 7
ATJ 1020§	MS 12
ATJ 1021§	MS 5
ATJ 1021§	MS 10
ATJ 1023§	MS 5
ATJ 1023§	MS 10
ATJ 1024§	MF 22
ATJ 1024§	MF 24
ATJ 1024§	MF 27
ATJ 1024§	MR 62
ATJ 1024§	MR 63
ATJ 1024§	MR 65
ATJ 1025§	MR 31·1
ATJ 1026§	MF 2
ATJ 1026§	MR 31·1
ATJ 1027§	MF 8
ATJ 1027§	MF 14
ATJ 1027§	MS 4
ATJ 1028§	MR 83
ATJ 1029§	MR 1·2
ATJ 1029§	MR 2
ATJ 1029§	MR 5·1
ATJ 1029§	MR 8·1
ATJ 1029§	MR 13
ATJ 1030§	MF 5
ATJ 1030§	MF 12
ATJ 1030§	MF 17
ATJ 1030§	MF 20
ATJ 1030§	MR 36
ATJ 1030§	MR 83
ATJ 1030§	MS 9
ATJ 1030§	MS 14
ATJ 1031§	MR 5·1
ATJ 1032§	MS 7
ATJ 1032§	MS 12
ATJ 1033§	MR 71
ATJ 1033§	MS 2
ATJ 1033§	MS 3
ATJ 1034§	MF 12
ATJ 1034§	MF 17
ATJ 1034§	MR 82·1
ATJ 1034§	MS 9
ATJ 1034§	MS 14
ATJ 1035§	MS 1·1
ATJ 1036§	MR 31·1
ATJ 1037§	MR 35
ATJ 1038§	MR 13·2
ATJ 1038§	MR 17
ATJ 1038§	MR 18
ATJ 1038§	MR 19
ATJ 1039§	MR 31·1
ATJ 1040§	MS 1·1
ATJ 1041§	MS 7
ATJ 1041§	MS 10
ATJ 1042§	ME 1
ATJ 1043§	MS 7
ATJ 1043§	MS 12
ATJ 1044§	MR 23
ATJ 1045§	MR 71
ATJ 1045§	MS 3
ATJ 1047§	MR 5·1
ATJ 1047§	MR 8·1
ATJ 1047§	MR 13
ATJ 1047§	MR 13·3
ATJ 1047§	MR 14·1
ATJ 1047§	MR 20
ATJ 1047§	MR 21
ATJ 1048§	MC 6
ATJ 1053§	MO 1·1
ATJ 1053§	MR 35
ATJ 1055§	MR 12
ATJ 1055§	MR 13·1
ATJ 1058§	MF 9
ATJ 1058§	MF 15
ATJ 1058§	MS 6
ATJ 1058§	MS 11
ATJ 1060§	MN 2
ATJ 1062§	MR 33
ATJ 1063§	MR 21
ATJ 1064§	MR 12
ATJ 1066§	MF 14
ATJ 1066§	MS 10
ATJ 1067§	MF 14
ATJ 1067§	MS 10
ATJ 1068§	MF 16
ATJ 1068§	MS 12
ATJ 1070§	MF 4
ATJ 1071§	MF 4
ATJ 1072§	MR 21
ATJ 1073§	MR 3
ATJ 1073§	MR 9
ATJ 1075§	MR 28
ATJ 1075§	MR 28·2
ATJ 1076§	MF 19
ATJ 1076§	MS 8
ATJ 1076§	MS 13
ATJ 1077§	MF 1·1
ATJ 1078§	MF 1·1
ATJ 1078§	MF 2
ATJ 1078§	MR 2
ATJ 1078§	MR 8·1
ATJ 1078§	MR 13
ATJ 1078§	MR 34
ATJ 1078§	MR 35
ATJ 1079§	MF 2
ATJ 1079§	MJ 5
ATJ 1080§	MF 3

§ Parts peculiar to Tractor only

Part Number Index—*continued*

Part Number	Page	Part Number	Page	Part Number	Page	Part Number	Page	Part Number	Page
ATJ 1080§	MF 4	ATJ 3034	MC 5	ATJ 3210§	MR 21	ATJ 4194§	MG 1	ATJ 6037§	MO 2
ATJ 1080§	MH 5	ATJ 3035§	MD 2	ATJ 3211§	MR 21	ATJ 4194§	MG 3	ATJ 6037§	MO 3
ATJ 1081§	MF 2	ATJ 3037§	MD 1	ATJ 3212§	MR 21	ATJ 4195§	MG 1	ATJ 6037§	MO 4
ATJ 1081§	MH 2	ATJ 3038§	MD 1	ATJ 3219§	MF 19	ATJ 4195§	MG 3	ATJ 6037§	MO 5
ATJ 1081§	MH 5	ATJ 3039§	MC 6	ATJ 3219§	MS 13	ATJ 4197§	MR 81	ATJ 6039§	MO 2
ATJ 1081§	MJ 4	ATJ 3045	MN 2	ATJ 3223§	MF 19	ATJ 4197§	MR 81·1	ATJ 6039§	MO 3
ATJ 1081§	MJ 5	ATJ 3046§	MN 2	ATJ 3223§	MS 13	ATJ 4198§	MR 81	ATJ 6039§	MO 4
ATJ 1081§	MJ 7	ATJ 3048§	MD 2	ATJ 3237§	MR 13	ATJ 4198§	MR 81·1	ATJ 6039§	MO 5
ATJ 1081§	MN 5	ATJ 3049§	MC 6	ATJ 3237§	MR 24	ATJ 4201§	MR 79	ATJ 6041§	MR 1·2
ATJ 1081§	MR 8·1	ATJ 3050§	MC 6	ATJ 3243	MR 24	ATJ 4202§	MC 5	ATJ 6041§	MR 5·1
ATJ 1081§	MR 34	ATJ 3051§	MA 3	ATJ 3251§	MK 3	ATJ 4206§	MR 81·1	ATJ 6042§	MR 23
ATJ 1081§	MR 70	ATJ 3051§	MR 85	ATJ 3266§	MR 24	ATJ 4207§	MR 81·1	ATJ 6048§	MR 13·2
ATJ 1088§	MG 3	ATJ 3054§	MA 3	ATJ 3267§	MR 24	ATJ 4209§	MR 81·1	ATJ 6048§	MR 14·1
ATJ 1089§	MF 9	ATJ 3054§	MR 85	ATJ 4000§	MH 3	ATJ 4210§	MR 81·1	ATJ 6051§	MR 13·3
ATJ 1089§	MF 15	ATJ 3055§	MA 3	ATJ 4014§	MG 2	ATJ 4211§	MR 81·1	ATJ 6051§	MR 14·1
ATJ 1089§	MS 6	ATJ 3055§	MR 85	ATJ 4015§	MG 1	ATJ 4212§	MR 81·1	ATJ 6051§	MR 20
ATJ 1089§	MS 11	ATJ 3058§	MD 4	ATJ 4015§	MG 3	ATJ 4214§	MR 81·1	ATJ 6053§	MF 10
ATJ 1090	MF 14	ATJ 3059§	MD 4	ATJ 4017§	MR 81	ATJ 4215§	MR 81·1	ATJ 6053§	MF 16
ATJ 1090	MS 10	ATJ 3060§	MD 4	ATJ 4017§	MR 81·1	ATJ 4216§	MR 81·1	ATJ 6053§	MR 8·1
ATJ 2000§	MR 78·1	ATJ 3061§	MD 4	ATJ 4018§	MR 79	ATJ 4219§	MR 81·1	ATJ 6053§	MR 13
ATJ 2001§	MR 79	ATJ 3062§	MN 1·1	ATJ 4019§	MR 78·1	ATJ 4223§	MR 78·1	ATJ 6053§	MS 7
ATJ 2002§	MR 80	ATJ 3063§	MN 1·1	ATJ 4022§	MR 78·1	ATJ 4224§	MR 78·1	ATJ 6053§	MS 12
ATJ 2010§	MR 2	ATJ 3064§	MN 1·1	ATJ 4023§	MR 81	ATJ 4225§	MR 78·1	ATJ 6054§	MR 13·3
ATJ 2010§	MR 3	ATJ 3065§	MA 2	ATJ 4023§	MR 81·1	ATJ 4264§	MR 81·1	ATJ 6054§	MR 24
ATJ 2010§	MR 8·1	ATJ 3065§	MR 84	ATJ 4024§	MR 81	ATJ 4360§	MG 2	ATJ 6056§	MR 5·1
ATJ 2010§	MR 13	ATJ 3066§	ML 1	ATJ 4024§	MR 81·1	ATJ 5003§	MS 2	ATJ 6056§	MR 8·1
ATJ 2011§	MF 19	ATJ 3067§	ML 1	ATJ 4025§	MR 81	ATJ 5004§	MS 2	ATJ 6056§	MR 13
ATJ 2011§	MS 8	ATJ 3067§	ML 4	ATJ 4025§	MR 81·1	ATJ 5004§	MS 3	ATJ 6058§	MR 5·1
ATJ 2011§	MS 13	ATJ 3069§	MA 2	ATJ 4031§	MR 81	ATJ 5005§	MS 2	ATJ 6058§	MR 8·1
ATJ 2012§	MC 4	ATJ 3071§	MN 2	ATJ 4032§	MR 81	ATJ 5005§	MS 3	ATJ 6058§	MR 13
ATJ 2013§	MR 78·1	ATJ 3072§	MN 2	ATJ 4032§	MR 81·1	ATJ 5006§	MS 2	ATJ 6059§	MR 5·1
ATJ 2016§	MF 14	ATJ 3075§	MN 1·1	ATJ 4033§	MR 81	ATJ 5010§	MR 72·1	ATJ 6059§	MR 8·1
ATJ 2016§	MS 10	ATJ 3078§	MR 84	ATJ 4033§	MR 81·1	ATJ 5011§	MR 72·1	ATJ 6059§	MR 13
ATJ 2022§	MR 33	ATJ 3080§	MR 84	ATJ 4034§	MR 81	ATJ 5011§	MR 77	ATJ 6065§	MR 2
ATJ 2023§	MR 33	ATJ 3082§	MA 3	ATJ 4035§	MR 81	ATJ 5012§	MN 5	ATJ 6065§	MR 3
ATJ 2024§	MR 33	ATJ 3082§	MA 4	ATJ 4036§	MR 81	ATJ 5019§	ME 1	ATJ 6065§	MR 8·1
ATJ 2025§	MR 33	ATJ 3082§	MR 85	ATJ 4038§	MR 81	ATJ 5019§	MS 1·1	ATJ 6066§	MR 2
ATJ 2030§	MN 5·1	ATJ 3085§	MA 3	ATJ 4038§	MR 81·1	ATJ 5021§	ME 1	ATJ 6066§	MR 3
ATJ 2060§	MF 14	ATJ 3085§	MR 85	ATJ 4039§	MR 81	ATJ 5026§	ME 1	ATJ 6066§	MR 9
ATJ 2060§	MS 10	ATJ 3086§	MA 3	ATJ 4041§	MR 81	ATJ 5031§	ME 1	ATJ 6066§	MR 13
ATJ 2066§	ML 4	ATJ 3086§	MR 85	ATJ 4043§	MH 4	ATJ 5036§	MN 5	ATJ 6067§	MR 2
ATJ 2068§	ML 4	ATJ 3087§	MR 84	ATJ 4043§	MR 37	ATJ 5039§	MN 5	ATJ 6067§	MR 3
ATJ 2071§	MR 51	ATJ 3092§	MD 1	ATJ 4044§	MH 4	ATJ 5040§	MN 5	ATJ 6067§	MR 9
ATJ 2072§	MR 49	ATJ 3096§	MD 3	ATJ 4044§	MR 37	ATJ 5043§	MS 1·1	ATJ 6070§	MR 2
ATJ 2074§	MF 14	ATJ 3097§	MD 3	ATJ 4045§	MH 4	ATJ 5067§	MR 77	ATJ 6070§	MR 3
ATJ 2074§	MS 10	ATJ 3098§	MD 2	ATJ 4045§	MR 37	ATJ 5068§	MR 75	ATJ 6070§	MR 10
ATJ 2075§	MR 49	ATJ 3100§	MD 2	ATJ 4046§	MH 4	ATJ 5069§	MR 75	ATJ 6070§	MR 13·1
ATJ 2078§	MK 7	ATJ 3101§	MD 2	ATJ 4046§	MR 37	ATJ 5070§	MN 7	ATJ 6072§	MR 10
ATJ 2079§	MK 1·1	ATJ 3102§	MR 39·1	ATJ 4072§	MR 31·1	ATJ 5079§	MJ 7	ATJ 6073§	MR 2
ATJ 2079§	MK 4	ATJ 3103§	MR 39·1	ATJ 4091§	MR 81	ATJ 5079§	MR 70	ATJ 6073§	MR 3
ATJ 2080§	MR 28·2	ATJ 3104§	MR 39·1	ATJ 4092§	MR 81	ATJ 5083§	MF 1·1	ATJ 6073§	MR 10
ATJ 2081§	MR 50	ATJ 3106§	MD 5	ATJ 4092§	MR 81·1	ATJ 5085§	MF 1·1	ATJ 6073§	MR 13·1
ATJ 2082§	MF 16	ATJ 3107§	MD 5	ATJ 4120§	MG 3	ATJ 5177§	MF 11	ATJ 6075§	MR 11
ATJ 2082§	MS 12	ATJ 3108§	MD 5	ATJ 4121§	MG 1	ATJ 5520	MF 27·1	ATJ 6075§	MR 13·1
ATJ 2084§	MR 51	ATJ 3109§	MD 5	ATJ 4121§	MG 4	ATJ 5521	MF 27·1	ATJ 6076§	MR 11
ATJ 2087§	MR 50	ATJ 3110§	ML 1	ATJ 4122§	MG 2	ATJ 6000§	MR 23	ATJ 6077§	MR 2
ATJ 2088§	MR 51	ATJ 3110§	ML 4	ATJ 4123§	MG 1	ATJ 6001§	MR 17	ATJ 6077§	MR 3
ATJ 2089§	MF 14	ATJ 3112§	MA 4	ATJ 4123§	MG 4	ATJ 6001§	MR 18	ATJ 6077§	MR 4
ATJ 2089§	MS 10	ATJ 3112§	MR 85	ATJ 4126§	MG 2	ATJ 6002§	MR 17	ATJ 6077§	MR 11
ATJ 2090§	MR 80·1	ATJ 3113§	ML 1	ATJ 4128§	MR 78·1	ATJ 6002§	MR 18	ATJ 6079§	MR 13·2
ATJ 2093§	MC 5	ATJ 3113§	ML 4	ATJ 4129§	MH 3	ATJ 6004§	MR 26	ATJ 6079§	MR 15
ATJ 2098§	MF 20	ATJ 3122§	MR 84	ATJ 4133§	MR 58·1	ATJ 6005§	MR 26	ATJ 6079§	MR 16
ATJ 2098§	MF 22	ATJ 3123§	MR 84	ATJ 4134§	MR 58·1	ATJ 6006	MR 31·1	ATJ 6081§	MR 2
ATJ 2098§	MF 24	ATJ 3124§	MR 84	ATJ 4135§	MR 58·1	ATJ 6008§	MO 4	ATJ 6081§	MR 3
ATJ 2098§	MF 27·1	ATJ 3127§	MA 2	ATJ 4138§	MR 58·1	ATJ 6009§	MO 4	ATJ 6081§	MR 4
ATJ 2098§	MR 61·1	ATJ 3129§	MN 7	ATJ 4139§	MR 58·1	ATJ 6011§	MO 1·1	ATJ 6086§	MR 13·2
ATJ 2098§	MR 63	ATJ 3132§	MN 7	ATJ 4140§	MH 3	ATJ 6013§	MR 5·1	ATJ 6086§	MR 17
ATJ 2098§	MR 65	ATJ 3134§	MN 7	ATJ 4142§	MH 5	ATJ 6014§	MR 28	ATJ 6086§	MR 18
ATJ 2107§	MR 52	ATJ 3134§	MR 85	ATJ 4148§	MH 3	ATJ 6015§	MR 22	ATJ 6086§	MR 19
ATJ 2109§	MR 52	ATJ 3135§	MN 6	ATJ 4155§	MH 4	ATJ 6017§	MR 22	ATJ 6087§	MR 2
ATJ 2110§	MR 52	ATJ 3138§	MN 6	ATJ 4155§	MR 37	ATJ 6018§	MR 22	ATJ 6087§	MR 3
ATJ 2111§	MR 52	ATJ 3139§	MN 6	ATJ 4161§	MG 4	ATJ 6019§	MR 22	ATJ 6087§	MR 4
ATJ 2112§	ML 4	ATJ 3140§	MN 6	ATJ 4165§	MG 3	ATJ 6021§	MR 13·3	ATJ 6091§	MR 13·2
ATJ 3005§	MA 4	ATJ 3144§	MN 2	ATJ 4166§	MG 2	ATJ 6021§	MR 22	ATJ 6091§	MR 18
ATJ 3005§	MR 85	ATJ 3145§	MN 2	ATJ 4179§	MG 2	ATJ 6022§	MR 22	ATJ 6091§	MR 19
ATJ 3007§	MD 4	ATJ 3146§	MN 6	ATJ 4180§	MH 1	ATJ 6023§	MR 22	ATJ 6093§	MR 11
ATJ 3008§	MR 39·1	ATJ 3147§	MC 6	ATJ 4180§	MH 3	ATJ 6024§	MR 22	ATJ 6093§	MR 13·1
ATJ 3009§	MR 39·1	ATJ 3148§	MC 6	ATJ 4186§	MG 1	ATJ 6027§	MO 4	ATJ 6094§	MR 2
ATJ 3010§	MR 39·1	ATJ 3151§	MF 1·1	ATJ 4186§	MG 3	ATJ 6028§	MO 4	ATJ 6094§	MR 8·1
ATJ 3011§	MR 39·1	ATJ 3200§	MR 21	ATJ 4189§	MR 36	ATJ 6029§	MO 4	ATJ 6094§	MR 13
ATJ 3013§	MN 4	ATJ 3203§	MR 21	ATJ 4192§	MG 1	ATJ 6033§	MR 13·4	ATJ 6097§	MR 2
ATJ 3014§	MN 4	ATJ 3205§	MR 21	ATJ 4192§	MG 3	ATJ 6033§	MR 29	ATJ 6099§	MR 11
ATJ 3015§	MN 4	ATJ 3206§	MR 21	ATJ 4193§	MG 1	ATJ 6034§	MR 13·4	ATJ 6099§	MR 13·1
ATJ 3021§	MK 6	ATJ 3208§	MR 21	ATJ 4193§	MG 3	ATJ 6034§	MR 29	ATJ 6100§	MR 11

§ Parts peculiar to Tractor only

Part Number Index—*continued*

Part Number	Page	Part Number	Page	Part Number	Page	Part Number	Page	Part Number	Page
ATJ 6101§	MR 11	ATJ 6187§	MR 13	ATJ 6347§	MR 33	ATJ 6750	MR 11	ATJ 7218§	MR 61·1
ATJ 6101§	MR 13·1	ATJ 6187§	MR 13·2	ATJ 6352§	MR 13	ATJ 6750	MR 13·1	ATJ 7219§	MR 61·1
ATJ 6102§	MR 11	ATJ 6188§	MR 11	ATJ 6353§	MR 13	ATJ 7056§	MF 21	ATJ 7220§	MR 61·1
ATJ 6103§	MR 11	ATJ 6188§	MR 13·1	ATJ 6356§	MR 33	ATJ 7056§	MF 23	ATJ 7221§	MR 61·1
ATJ 6103§	MR 13·1	ATJ 6190§	MR 13	ATJ 6358§	MR 30	ATJ 7056§	MF 24	ATJ 7227§	MF 21
ATJ 6104§	MR 11	ATJ 6190§	MR 13·2	ATJ 6359§	MR 30	ATJ 7056§	MF 26	ATJ 7227§	MF 24
ATJ 6104§	MR 13·1	ATJ 6191§	MR 11	ATJ 6360§	MR 3	ATJ 7056§	MF 27	ATJ 7227§	MF 27
ATJ 6105§	MR 11	ATJ 6191§	MR 13·1	ATJ 6360§	MR 8·1	ATJ 7056§	MR 62	ATJ 7228§	MF 22
ATJ 6105§	MR 13·1	ATJ 6192§	MR 11	ATJ 6360§	MR 13	ATJ 7056§	MR 63	ATJ 7228§	MF 24
ATJ 6106§	MR 11	ATJ 6194§	MR 11	ATJ 6363§	MR 16	ATJ 7056§	MR 65	ATJ 7228§	MF 27
ATJ 6106§	MR 13·1	ATJ 6194§	MR 13·1	ATJ 6365§	MR 16	ATJ 7067§	MF 19	ATJ 7228§	MR 62
ATJ 6107§	MR 18	ATJ 6200§	MR 11	ATJ 6368§	MR 16	ATJ 7067§	MS 8	ATJ 7228§	MR 63
ATJ 6108§	MR 18	ATJ 6200§	MR 13·1	ATJ 6370§	MR 24	ATJ 7067§	MS 13	ATJ 7228§	MR 65
ATJ 6109§	MR 18	ATJ 6201§	MR 11	ATJ 6372§	MR 24	ATJ 7102§	MF 3	ATJ 7231§	MR 59·1
ATJ 6110§	MR 18	ATJ 6201§	MR 13·1	ATJ 6373§	MR 23	ATJ 7102§	MF 4	ATJ 7237§	MS 4
ATJ 6111§	MR 18	ATJ 6202§	MR 11	ATJ 6373§	MR 24	ATJ 7102§	MF 6	ATJ 7239§	MS 4
ATJ 6112§	MR 18	ATJ 6202§	MR 13·1	ATJ 6375§	MR 24	ATJ 7102§	MF 13	ATJ 7240§	MF 8
ATJ 6113§	MR 18	ATJ 6203§	MR 26	ATJ 6376§	MR 24	ATJ 7102§	MS 5	ATJ 7240§	MF 14
ATJ 6115§	MR 13	ATJ 6204§	MR 26	ATJ 6378§	MR 28·2	ATJ 7102§	MS 10	ATJ 7240§	MS 4
ATJ 6115§	MR 13·2	ATJ 6205§	MR 13·4	ATJ 6382§	MR 28·2	ATJ 7103§	MF 10	ATJ 7243§	MS 4
ATJ 6118§	MR 13	ATJ 6205§	MR 26	ATJ 6387§	MR 28·1	ATJ 7104§	MS 7	ATJ 7245§	MR 62
ATJ 6118§	MR 13·2	ATJ 6211§	MR 11	ATJ 6387§	MR 28·2	ATJ 7156§	MF 3	ATJ 7245§	MR 63
ATJ 6124§	MR 13·3	ATJ 6211§	MR 12	ATJ 6388§	MR 26	ATJ 7156§	MF 11	ATJ 7245§	MR 65
ATJ 6124§	MR 23	ATJ 6211§	MR 13·1	ATJ 6390§	MR 24	ATJ 7156§	MS 9	ATJ 7246§	MR 62
ATJ 6125§	MR 13	ATJ 6240§	MO 5	ATJ 6392§	MR 28·2	ATJ 7157§	MF 11	ATJ 7246§	MR 63
ATJ 6126§	MR 2	ATJ 6241§	MO 5	ATJ 6394§	MR 28·1	ATJ 7157§	MF 17	ATJ 7246§	MR 65
ATJ 6126§	MR 9	ATJ 6242§	MO 5	ATJ 6394§	MR 28·2	ATJ 7157§	MR 83	ATJ 7247§	MR 59·1
ATJ 6126§	MR 13	ATJ 6243§	MO 5	ATJ 6395§	MR 24	ATJ 7157§	MS 9	ATJ 7248§	MF 20
ATJ 6127§	MR 1·2	ATJ 6244§	MO 5	ATJ 6396§	MR 24	ATJ 7157§	MS 14	ATJ 7249§	MF 22
ATJ 6127§	MR 2	ATJ 6245§	MO 5	ATJ 6397§	MR 24	ATJ 7159§	MR 62	ATJ 7257§	MF 3
ATJ 6127§	MR 4	ATJ 6246§	MO 5	ATJ 6398§	MR 24	ATJ 7160§	MR 62	ATJ 7257§	MF 4
ATJ 6127§	MR 10	ATJ 6247§	MO 5	ATJ 6399§	MR 24	ATJ 7161§	MR 62	ATJ 7260§	MF 21
ATJ 6127§	MR 13·1	ATJ 6248§	MO 5	ATJ 6400§	MR 16	ATJ 7162§	MR 62	ATJ 7260§	MF 24
ATJ 6128§	MR 18	ATJ 6251§	MO 4	ATJ 6401§	MR 24	ATJ 7163§	MR 62	ATJ 7260§	MF 27
ATJ 6129§	MR 31·1	ATJ 6251§	MO 5	ATJ 6402§	MR 24	ATJ 7163§	MR 63	ATJ 7262§	MF 21
ATJ 6130§	MR 31·1	ATJ 6254§	MO 5	ATJ 6403§	MR 24	ATJ 7163§	MR 65	ATJ 7262§	MF 24
ATJ 6132§	MO 4	ATJ 6257§	MR 30	ATJ 6404§	MR 28·1	ATJ 7164§	MF 22	ATJ 7262§	MF 27
ATJ 6133§	MO 4	ATJ 6258§	MR 30	ATJ 6404§	MR 28·2	ATJ 7165§	MF 22	ATJ 7267§	MF 21
ATJ 6136§	MR 13·3	ATJ 6259§	MR 30	ATJ 6405§	MR 24	ATJ 7165§	MR 61·1	ATJ 7268§	MF 21
ATJ 6136§	MR 20	ATJ 6260§	MR 30	ATJ 6406§	MR 28·1	ATJ 7169§	MR 69	ATJ 7271§	MS 4
ATJ 6136§	MR 21	ATJ 6263§	MR 30	ATJ 6407§	MR 28·1	ATJ 7170§	MR 69	ATJ 7273§	MS 7
ATJ 6139§	MR 11	ATJ 6265§	MR 30	ATJ 6411§	MF 4	ATJ 7171§	MR 62	ATJ 7274§	MS 7
ATJ 6142§	MR 13·4	ATJ 6266§	MR 30	ATJ 6421§	MR 24	ATJ 7171§	MR 63	ATJ 7275§	MF 31
ATJ 6142§	MR 29	ATJ 6267§	MR 30	ATJ 6422§	MR 19	ATJ 7171§	MR 65	ATJ 7275§	MR 67
ATJ 6143§	MR 13·4	ATJ 6268§	MR 30	ATJ 6423§	MR 28·2	ATJ 7172§	MR 71	ATJ 7276§	MF 31
ATJ 6143§	MR 29	ATJ 6269§	MR 30	ATJ 6425§	MR 13·2	ATJ 7173§	MR 71	ATJ 7276§	MR 67
ATJ 6146§	MR 13·3	ATJ 6276§	MR 3	ATJ 6425§	MR 14·1	ATJ 7177§	MR 71	ATJ 7277§	MF 19
ATJ 6146§	MR 23	ATJ 6276§	MR 8·1	ATJ 6425§	MR 17	ATJ 7178§	MR 71	ATJ 7277§	MR 59·1
ATJ 6149§	MR 12	ATJ 6277§	MR 3	ATJ 6425§	MR 18	ATJ 7179§	MR 71	ATJ 7277§	MR 64
ATJ 6149§	MR 13·1	ATJ 6277§	MR 9	ATJ 6425§	MR 19	ATJ 7180§	MR 71	ATJ 7277§	MS 8
ATJ 6150§	MR 12	ATJ 6279§	MR 33	ATJ 6426§	MR 13·2	ATJ 7181§	MR 71	ATJ 7284§	MR 59·1
ATJ 6151§	MR 12	ATJ 6280§	MR 33	ATJ 6426§	MR 14·1	ATJ 7182§	MR 59·1	ATJ 7285§	MF 10
ATJ 6153§	MR 11	ATJ 6281§	MR 33	ATJ 6426§	MR 17	ATJ 7183§	MF 18	ATJ 7285§	MS 7
ATJ 6155§	MR 11	ATJ 6282§	MR 33	ATJ 6426§	MR 18	ATJ 7183§	MR 59·1	ATJ 7286§	MF 23
ATJ 6156§	MR 11	ATJ 6283§	MR 33	ATJ 6426§	MR 19	ATJ 7183§	MS 8	ATJ 7287§	MF 23
ATJ 6156§	MR 13·1	ATJ 6284§	MR 33	ATJ 6427§	MR 19	ATJ 7187§	MF 20	ATJ 7311§	MF 22
ATJ 6157§	MR 11	ATJ 6285§	MR 33	ATJ 6429§	MR 19	ATJ 7187§	MF 22	ATJ 7311§	MR 61·1
ATJ 6157§	MR 13·1	ATJ 6286§	MR 33	ATJ 6434§	MR 16	ATJ 7187§	MR 59·1	ATJ 7312§	MF 22
ATJ 6158§	MR 11	ATJ 6288§	MR 33	ATJ 6455§	MR 33	ATJ 7192§	MR 59·1	ATJ 7312§	MR 61·1
ATJ 6158§	MR 13·1	ATJ 6292§	MR 33	ATJ 6456§	MR 21	ATJ 7193§	MR 59·1	ATJ 7360§	MR 71
ATJ 6159§	MR 12	ATJ 6293§	MR 3	ATJ 6461§	MR 28·2	ATJ 7196§	MR 59·1	ATJ 7361§	MR 71
ATJ 6159§	MR 13·1	ATJ 6293§	MR 4	ATJ 6463§	MR 28·1	ATJ 7197§	MR 59·1	ATJ 7363§	MF 8
ATJ 6160§	MR 12	ATJ 6293§	MR 10	ATJ 6468§	MR 28	ATJ 7198§	MR 59·1	ATJ 7363§	MF 14
ATJ 6160§	MR 13·1	ATJ 6294§	MR 33	ATJ 6468§	MR 28·2	ATJ 7205§	MF 5	ATJ 7363§	MS 4
ATJ 6161§	MR 12	ATJ 6295§	MR 3	ATJ 6470§	MR 28·2	ATJ 7205§	MF 24	ATJ 7367§	MF 25
ATJ 6161§	MR 13·1	ATJ 6295§	MR 8·1	ATJ 6471§	MR 28·2	ATJ 7205§	MR 59·1	ATJ 7367§	MR 59·1
ATJ 6162§	MR 11	ATJ 6296§	MR 33	ATJ 6477§	MR 12	ATJ 7205§	MR 63	ATJ 7367§	MR 60
ATJ 6162§	MR 13·1	ATJ 6297§	MR 33	ATJ 6483§	MR 21	ATJ 7206§	MF 25	ATJ 7367§	MR 64
ATJ 6168§	MR 18	ATJ 6301§	MR 22	ATJ 6490§	MR 25·1	ATJ 7206§	MF 28	ATJ 7368§	MF 25
ATJ 6173§	MR 25·1	ATJ 6302§	MR 22	ATJ 6491§	MR 25·1	ATJ 7206§	MR 59·1	ATJ 7368§	MR 59·1
ATJ 6174§	MR 25·1	ATJ 6312§	MR 12	ATJ 6492§	MR 25·1	ATJ 7206§	MR 60	ATJ 7368§	MR 60
ATJ 6177§	MR 25·1	ATJ 6319§	MR 19	ATJ 6493§	MR 13·4	ATJ 7206§	MR 64	ATJ 7368§	MR 64
ATJ 6178§	MR 25·1	ATJ 6320§	MR 19	ATJ 6493§	MR 25·1	ATJ 7206§	MR 66	ATJ 7370§	MF 25
ATJ 6180§	MR 25·1	ATJ 6322§	MR 21	ATJ 6531§	MR 21	ATJ 7207§	MR 62	ATJ 7370§	MR 59·1
ATJ 6181§	MR 25·1	ATJ 6324§	MR 21	ATJ 6532§	MR 21	ATJ 7207§	MR 63	ATJ 7370§	MR 60
ATJ 6182§	MR 25·1	ATJ 6326§	MR 21	ATJ 6548	MR 33	ATJ 7207§	MR 65	ATJ 7370§	MR 64
ATJ 6183§	MR 13·4	ATJ 6329§	MR 21	ATJ 6549	MR 33	ATJ 7208§	MR 70	ATJ 7371§	MR 59·1
ATJ 6183§	MR 25·1	ATJ 6330§	MR 21	ATJ 6550	MR 33	ATJ 7209§	MR 70	ATJ 7372§	MR 59·1
ATJ 6184§	MR 13	ATJ 6332§	MR 16	ATJ 6551	MR 33	ATJ 7210§	MR 70	ATJ 7373§	MF 25
ATJ 6184§	MR 13·2	ATJ 6337§	MR 33	ATJ 6552	MR 33	ATJ 7211§	MR 70	ATJ 7373§	MR 59·1
ATJ 6185§	MR 13	ATJ 6338§	MR 33	ATJ 6554	MR 33	ATJ 7212§	MR 70	ATJ 7373§	MR 60
ATJ 6185§	MR 13·2	ATJ 6340§	MR 12	ATJ 6556	MR 16	ATJ 7213§	MR 70	ATJ 7373§	MR 64
ATJ 6186§	MR 12	ATJ 6346§	MR 12	ATJ 6718	MR 24	ATJ 7216§	MR 69	ATJ 7376§	MF 11
ATJ 6186§	MR 13·1			ATJ 6719	MR 24	ATJ 7217§	MR 69	ATJ 7376§	MF 17

§ Parts peculiar to Tractor only

Part Number Index—*continued*

Part Number	Page	Part Number	Page	Part Number	Page	Part Number	Page	Part Number	Page
ATJ 7376§	MR 83	ATJ 7425§	MR 61·1	ATJ 7545§	MF 25	ATJ 7650§	MF 32	ATJ 7788§	MR 65
ATJ 7376§	MS 9	ATJ 7426§	MR 61·1	ATJ 7545§	MF 28	ATJ 7650§	MR 66	ATJ 7790§	MF 27
ATJ 7376§	MS 14	ATJ 7437§	MF 19	ATJ 7545§	MR 64	ATJ 7650§	MR 67	ATJ 7792§	MR 65
ATJ 7377§	MF 19	ATJ 7437§	MS 8	ATJ 7545§	MR 66	ATJ 7651§	MF 20	ATJ 7795§	MF 23
ATJ 7377§	MR 59·1	ATJ 7437§	MS 13	ATJ 7549§	MF 5	ATJ 7651§	MF 22	ATJ 7795§	MF 26
ATJ 7377§	MR 64	ATJ 7438§	MF 24	ATJ 7549§	MF 27	ATJ 7651§	MF 24	ATJ 7795§	MF 27·1
ATJ 7377§	MS 8	ATJ 7438§	MR 63	ATJ 7549§	MR 65	ATJ 7651§	MR 61·1	ATJ 7795§	MR 65
ATJ 7378§	MF 19	ATJ 7439§	MF 24	ATJ 7550§	MF 5	ATJ 7651§	MR 63	ATJ 7801§	MF 19
ATJ 7378§	MR 59·1	ATJ 7446§	MF 19	ATJ 7550§	MF 27	ATJ 7653§	MR 82·1	ATJ 7801§	MS 8
ATJ 7378§	MR 64	ATJ 7446§	MS 8	ATJ 7550§	MR 65	ATJ 7654§	MF 14	ATJ 7801§	MS 13
ATJ 7378§	MS 8	ATJ 7446§	MS 13	ATJ 7551§	MF 23	ATJ 7654§	MS 10	ATJ 7803§	MF 19
ATJ 7379§	MF 11	ATJ 7450§	MF 26	ATJ 7551§	MF 26	ATJ 7655§	MS 10	ATJ 7403§	MS 13
ATJ 7379§	MS 9	ATJ 7451§	MF 26	ATJ 7551§	MF 27·1	ATJ 7656§	MR 82·1	ATJ 7804§	MF 27·1
ATJ 7380§	MF 25	ATJ 7478§	MS 7	ATJ 7551§	MR 65	ATJ 7657§	MJ 6	ATJ 7804§	MR 65
ATJ 7380§	MR 59·1	ATJ 7478§	MS 12	ATJ 7555§	MF 27·1	ATJ 7658§	MJ 6	ATJ 7805§	MF 27·1
ATJ 7380§	MR 60	ATJ 7479§	MS 7	ATJ 7555§	MR 65	ATJ 7659§	MF 2	ATJ 7805§	MR 65
ATJ 7380§	MR 64	ATJ 7479§	MS 12	ATJ 7556§	MF 27·1	ATJ 7660§	MF 33	ATJ 7820§	MS 4
ATJ 7381§	MR 82·1	ATJ 7480§	MS 7	ATJ 7556§	MR 65	ATJ 7660§	MR 68	ATJ 7821§	MS 4
ATJ 7382§	MR 82·1	ATJ 7480§	MS 10	ATJ 7557§	MF 27·1	ATJ 7665§	MF 16	ATJ 7822§	MS 5
ATJ 7384§	MF 17	ATJ 7481§	MF 8	ATJ 7557§	MR 65	ATJ 7665§	MS 12	ATJ 7822§	MS 10
ATJ 7384§	MF 25	ATJ 7481§	MS 5	ATJ 7558§	MF 27·1	ATJ 7666§	MF 16	ATJ 7824	MS 12
ATJ 7384§	MF 28	ATJ 7482§	MR 31·1	ATJ 7558§	MR 65	ATJ 7666§	MS 12	ATJ 7823§	MS 4
ATJ 7384§	MR 59·1	ATJ 7495§	MF 18	ATJ 7561§	MF 33	ATJ 7667§	MF 19	ATJ 7828	MS 10
ATJ 7384§	MR 60	ATJ 7495§	MF 19	ATJ 7561§	MR 68	ATJ 7667§	MR 59·1	ATJ 7854§	MF 10
ATJ 7384§	MR 64	ATJ 7495§	MR 59	ATJ 7564§	MJ 6	ATJ 7667§	MS 8	ATJ 7854§	MF 16
ATJ 7384§	MR 66	ATJ 7495§	MS 8	ATJ 7565§	MJ 6	ATJ 7667§	MS 13	ATJ 7854§	MS 7
ATJ 7384§	MR 83	ATJ 7495§	MS 13	ATJ 7566§	MJ 6	ATJ 7673§	MF 27·1	ATJ 7854§	MS 12
ATJ 7384§	MS 14	ATJ 7500§	MF 16	ATJ 7567§	MJ 6	ATJ 7673§	MR 65	ATJ 7855§	MF 10
ATJ 7388§	MF 22	ATJ 7502§	MS 12	ATJ 7569§	MJ 6	ATJ 7675§	MF 27	ATJ 7855§	MF 16
ATJ 7389§	MF 23	ATJ 7504§	MF 16	ATJ 7571§	MF 33	ATJ 7684§	MF 27	ATJ 7855§	MS 7
ATJ 7389§	MF 26	ATJ 7504§	MS 12	ATJ 7571§	MR 68	ATJ 7686§	MF 27	ATJ 7855§	MS 10
ATJ 7390§	MS 1·1	ATJ 7505§	MF 16	ATJ 7572§	MF 33	ATJ 7688§	MR 65	ATJ 7900	MF 14
ATJ 7398§	MF 23	ATJ 7505§	MS 12	ATJ 7572§	MR 68	ATJ 7690§	MR 65	ATJ 7900	MS 10
ATJ 7398§	MF 26	ATJ 7506§	MF 16	ATJ 7573§	MF 33	ATJ 7704§	MS 10	ATJ 7901	MF 14
ATJ 7399§	MF 23	ATJ 7506§	MS 12	ATJ 7573§	MR 68	ATJ 7719§	MF 19	ATJ 7901	MS 10
ATJ 7399§	MF 26	ATJ 7507§	MF 16	ATJ 7574§	MJ 6	ATJ 7719§	MS 13	ATJ 7915	MF 17
ATJ 7400§	MF 22	ATJ 7507§	MS 12	ATJ 7575§	MJ 6	ATJ 7720§	MF 19	ATJ 7915	MS 14
ATJ 7400§	MF 24	ATJ 7508§	MF 16	ATJ 7576§	MJ 6	ATJ 7720§	MS 13	ATJ 7916	MF 17
ATJ 7400§	MR 62	ATJ 7508§	MS 12	ATJ 7577§	MJ 6	ATJ 7738§	MR 83	ATJ 7916	MS 14
ATJ 7400§	MR 63	ATJ 7511§	MF 16	ATJ 7582§	MJ 7	ATJ 7739§	MR 83	ATJ 7925	MF 27·1
ATJ 7401§	MR 62	ATJ 7511§	MS 12	ATJ 7583§	MJ 7	ATJ 7749§	MJ 6	ATJ 7926	MF 27·1
ATJ 7402§	MR 62	ATJ 7512§	MF 15	ATJ 7584§	MJ 7	ATJ 7750§	MJ 6	ATJ 7927	MF 23
ATJ 7402§	MR 63	ATJ 7512§	MS 11	ATJ 7585§	MJ 7	ATJ 7760§	MF 12	ATJ 7927	MF 26
ATJ 7402§	MR 65	ATJ 7513§	MF 15	ATJ 7586§	MJ 7	ATJ 7760§	MF 17	ATJ 7927	MF 27·1
ATJ 7403§	MR 62	ATJ 7513§	MS 11	ATJ 7587§	MJ 7	ATJ 7760§	MR 82·1	ATJ 7938	MS 12
ATJ 7404§	MR 62	ATJ 7521§	MF 14	ATJ 7588§	MN 8	ATJ 7760§	MS 9	ATJ 8014§	MM 4
ATJ 7404§	MR 63	ATJ 7522§	MF 14	ATJ 7589§	MN 8	ATJ 7760§	MS 14	ATJ 8015§	MM 4
ATJ 7404§	MR 65	ATJ 7524§	MS 10	ATJ 7590§	MN 8	ATJ 7761§	MF 12	ATJ 8016§	MM 4
ATJ 7405§	MF 21	ATJ 7526§	MF 4	ATJ 7592§	MF 28	ATJ 7761§	MF 17	ATJ 8017§	MM 4
ATJ 7406§	MF 21	ATJ 7526§	MF 17	ATJ 7592§	MR 66	ATJ 7761§	MR 82·1	ATJ 8018§	MM 4
ATJ 7416§	MF 9	ATJ 7526§	MS 14	ATJ 7593§	MF 28	ATJ 7761§	MS 9	ATJ 8019§	MM 4
ATJ 7416§	MF 15	ATJ 7527§	MF 14	ATJ 7593§	MR 66	ATJ 7761§	MS 14	ATJ 8020§	MM 4
ATJ 7416§	MS 6	ATJ 7527§	MS 10	ATJ 7594§	MF 28	ATJ 7762§	MF 12	ATJ 8030§	MM 2
ATJ 7416§	MS 11	ATJ 7528§	MF 14	ATJ 7594§	MR 66	ATJ 7762§	MF 17	ATJ 8033§	MF 29
ATJ 7417§	MF 9	ATJ 7528§	MS 10	ATJ 7595§	MF 28	ATJ 7762§	MS 9	ATJ 8033§	MM 4
ATJ 7417§	MF 15	ATJ 7529§	MF 17	ATJ 7595§	MR 66	ATJ 7762§	MR 82·1	ATJ 8034§	MM 1
ATJ 7417§	MS 6	ATJ 7529§	MR 83	ATJ 7596§	MF 28	ATJ 7762§	MS 14	ATJ 8036§	MM 2
ATJ 7417§	MS 11	ATJ 7529§	MS 14	ATJ 7596§	MR 66	ATJ 7773§	MF 11	ATJ 8038§	MF 29
ATJ 7418§	MF 9	ATJ 7532§	MF 17	ATJ 7599§	MF 28	ATJ 7773§	MR 82·1	ATJ 8038§	MM 4
ATJ 7418§	MF 15	ATJ 7532§	MR 83	ATJ 7599§	MR 66	ATJ 7773§	MS 14	ATJ 8046§	MM 1
ATJ 7418§	MS 6	ATJ 7532§	MS 14	ATJ 7610§	MR 71	ATJ 7774§	MF 14	ATJ 8050§	MM 1
ATJ 7418§	MS 11	ATJ 7533§	MF 17	ATJ 7611§	MJ 6	ATJ 7775§	MF 12	ATJ 8055§	MM 1
ATJ 7419§	MF 9	ATJ 7533§	MR 83	ATJ 7614§	MS 3	ATJ 7775§	MF 14	ATJ 8057§	MM 3
ATJ 7419§	MF 15	ATJ 8533§	MS 14	ATJ 7622§	MS 2	ATJ 7775§	MF 17	ATJ 8058§	MM 3
ATJ 7419§	MS 6	ATJ 7538§	MF 25	ATJ 7623§	MS 2	ATJ 7775§	MR 59·1	ATJ 8077§	MM 3
ATJ 7419§	MS 11	ATJ 7538§	MF 28	ATJ 7625§	MS 3	ATJ 7775§	MR 82·1	ATJ 8078§	MM 1
ATJ 7420§	MF 9	ATJ 7538§	MR 64	ATJ 7626§	MS 3	ATJ 7775§	MS 1·1	ATJ 8081§	MM 1
ATJ 7420§	MF 15	ATJ 7538§	MR 66	ATJ 7631§	MF 16	ATJ 7775§	MS 9	ATJ 8084§	MM 2
ATJ 7420§	MS 6	ATJ 7540§	MF 25	ATJ 7631§	MS 12	ATJ 7775§	MS 10	ATJ 8084§	MM 4
ATJ 7420§	MS 11	ATJ 7540§	MF 28	ATJ 7633§	MR 83	ATJ 7775§	MS 14	ATJ 8089§	MM 2
ATJ 7421§	MF 9	ATJ 7540§	MR 64	ATJ 7634§	MR 83	ATJ 7776§	MF 19	ATJ 8093§	MM 6
ATJ 7421§	MF 15	ATJ 7540§	MR 66	ATJ 7635§	MR 83	ATJ 7776§	MS 13	ATJ 8128§	MM1
ATJ 7421§	MS 6	ATJ 7541§	MF 25	ATJ 7636§	MR 83	ATJ 7778§	MF 19	ATJ 8128§	MM4
ATJ 7421§	MS 11	ATJ 7541§	MF 28	ATJ 7637§	MR 83	ATJ 7778§	MS 13	ATJ 8250§	MR 47
ATJ 7422§	MF 9	ATJ 7541§	MR 64	ATJ 7638§	MR 83	ATJ 7780§	MF 9	ATJ 8251§	MR 47
ATJ 7422§	MF 15	ATJ 7541§	MR 66	ATJ 7639§	MF 27·1	ATJ 7780§	MF 15	ATJ 8252§	MR 47
ATJ 7422§	MF 18	ATJ 7542§	MF 19	ATJ 7639§	MR 65	ATJ 7780§	MS 6	ATJ 8252§	MR 48·1
ATJ 7422§	MF 19	ATJ 7542§	MR 64	ATJ 7640§	MF 27·1	ATJ 7780§	MS 11	ATJ 8259§	MR 48·1
ATJ 7422§	MS 6	ATJ 7542§	MS 8	ATJ 7640§	MR 65	ATJ 7782§	MF 19	ATJ 8259§	MR 55
ATJ 7422§	MS 8	ATJ 7542§	MS 13	ATJ 7643§	MF 14	ATJ 7782§	MR 59·1	ATJ 8275§	MD 1
ATJ 7422§	MS 11	ATJ 7543§	MF 25	ATJ 7643§	MS 10	ATJ 7782§	MS 8	ATJ 8278§	MR 40·1
ATJ 7422§	MS 13	ATJ 7543§	MR 64	ATJ 7644§	MF 14	ATJ 7784§	MF 27	ATJ 8278§	MR 48
ATJ 7423§	MR 61·1	ATJ 7544§	MF 25	ATJ 7644§	MS 10	ATJ 7784§	MR 65	ATJ 8279§	MR 40·1
ATJ 7424§	MR 61·1	ATJ 7544§	MR 64	ATJ 7650§	MF 28	ATJ 7786§	MF 27	ATJ 8280§	MR 40·1

§ Parts peculiar to Tractor only

Part Number Index—*continued*

Part Number	Page	Part Number	Page	Part Number	Page	Part Number	Page	Part Number	Page
ATJ 8280§	MR 48	ATJ 8502§	MR 48·1	ATJ 9307§	MR 67	ATJ 9412§	MM 1	ATJ 9534§	MR 83
ATJ 8281§	MR 40	ATJ 8503§	MK 3	ATJ 9310§	MO 2	ATJ 9422§	MR 11	ATJ 9535§	MR 8·1
ATJ 8282§	MR 41	ATJ 8503§	MK 5	ATJ 9310§	MO 3	ATJ 9423§	MH 4	ATJ 9536§	MJ 6
ATJ 8283§	MR 42	ATJ 8505§	MK 2	ATJ 9310§	MO 4	ATJ 9423§	MR 37	ATJ 9539§	MR 3
ATJ 8283§	MR 48	ATJ 8508§	MK 2	ATJ 9325§	MF 30	ATJ 9424§	MR 11	ATJ 9543	MM 6
ATJ 8284§	MR 42	ATJ 8509§	MN 4	ATJ 9325§	MF 32	ATJ 9424§	MR 13·1	ATJ 9545	MR 23
ATJ 8284§	MR 48	ATJ 8510§	MN 4	ATJ 9325§	MR 67	ATJ 9425§	MR 11	ATJ 9546	MR 33
ATJ 8286§	MP 1	ATJ 8511§	ML 4	ATJ 9331§	MF 17	ATJ 9426§	MR 59·1	ATJ 9554	MS 4
ATJ 8288§	MR 56·1	ATJ 8512§	ML 4	ATJ 9331§	MR 83	ATJ 9427§	MF 21	ATJ 9554	MS 5
ATJ 8289§	MR 56·1	ATJ 8513§	ML 4	ATJ 9331§	MS 14	ATJ 9428§	MF 21	ATJ 9554	MS 10
ATJ 8290§	MR 56·1	ATJ 8514§	ML 4	ATJ 9334§	MG 3	ATJ 9451§	MF 3		
ATJ 8291§	MR 56·1	ATJ 8515§	ML 4	ATJ 9341§	MR 36	ATJ 9451§	MF 6	AUN 105§	MR 39·1
ATJ 8310§	MK 1·1	ATJ 8516§	ML 4	ATJ 9345§	MJ 4	ATJ 9456§	MR 13·2		
ATJ 8311§	MK 1·1	ATJ 8517§	ML 4	ATJ 9346§	MD 1	ATJ 9456§	MR 18	1B 4623	MR 33
ATJ 8316§	ML 1	ATJ 8524§	MN 3	ATJ 9348§	MD 1	ATJ 9457§	MR 17		
ATJ 8317§	MK 2	ATJ 8525§	MN 3	ATJ 9351§	MF 7	ATJ 9458§	MF 4	11B 487	MD 2
ATJ 8329§	MK 2	ATJ 8526§	MN 3	ATJ 9351§	MF 10	ATJ 9458§	MF 13		
ATJ 8329§	MK 4	ATJ 8527§	MN 3	ATJ 9351§	MM 5	ATJ 9459§	MF 4	BCA 4378	MK 7
ATJ 8330§	MK 4	ATJ 8535§	MR 52	ATJ 9351§	MS 7	ATJ 9459§	MS 10	BCA 4575	MR 51
ATJ 8331§	MK 4	ATJ 8536§	MR 52	ATJ 9359§	MR 36	ATJ 9460§	MJ 6		
ATJ 8346§	MR 46	ATJ 8543§	ML 4	ATJ 9360§	MR 36	ATJ 9461§	MR 8·1	BFS 57	†MR 40·1
ATJ 8346§	MR 47	ATJ 8544§	ML 4	ATJ 9361§	MR 36	ATJ 9462§	MR 3	BFS 162	MR 49
ATJ 8347§	MR 46	ATJ 8551§	MR 51	ATJ 9362§	MR 36	ATJ 9463§	MR 30	BFS 171	†MR 40·1
ATJ 8347§	MR 47	ATJ 8554§	MN 4	ATJ 9366§	MF 7	ATJ 9464§	MR 19	BFS 370	MR 41
ATJ 8350§	MR 45	ATJ 8556§	MR 55	ATJ 9367§	MF 20	ATJ 9473§	MR 8·1	BFS 370	MR 50
ATJ 8351§	MR 43	ATJ 8557§	MK 7	ATJ 9368§	MK 6	ATJ 9474§	MM 6	BFS 380	MR 43
ATJ 8354§	MR 45	ATJ 8559§	MK 3	ATJ 9370§	MJ1	ATJ 9475§	MM 6	BFS 380	MR 51
ATJ 8356§	MR 48	ATJ 8559§	MK 5	ATJ 9370§	MN 8	ATJ 9476§	MM 6	BFS 411	MR 41
ATJ 8357§	MN 7	ATJ 8562§	MR 53	ATJ 9371§	MN 8	ATJ 9477§	MM 6	BFS 411	MR 50
ATJ 8358§	MR 46	ATJ 8563§	MR 53	ATJ 9375§	MR 27	ATJ 9478§	MM 6	BFS 987	MK 3
ATJ 8358§	MR 47	ATJ 8564§	MR 53	ATJ 9375§	MR 28	ATJ 9479§	MM 6	BFS 987	MK 5
ATJ 8365§	MR 52	ATJ 8565§	MR 53	ATJ 9375§	MR 28·1	ATJ 9480§	MM 6	BFS 989	MR 51
ATJ 8366§	MR 45	ATJ 8566§	MR 53	ATJ 9375§	MR 28·2	ATJ 9481§	MM 6		
ATJ 8367§	MR 45	ATJ 8567§	MR 53	ATJ 9376§	MR 27	ATJ 9482§	MM 6	BHA 4148	MR 51
ATJ 8378§	MR 52	ATJ 8569§	MR 53	ATJ 9376§	MR 28	ATJ 9483§	MM 6	BHA 4186	MR 55
ATJ 8379§	MR 52	ATJ 8570§	MR 52	ATJ 9376§	MR 28·1	ATJ 9484§	MO 4		
ATJ 8411§	MR 52	ATJ 8571§	MK 3	ATJ 9376§	MR 28·2	ATJ 9484§	MO 5	BLS 108	MR 80
ATJ 8414§	MN 6	ATJ 8571§	MK 5	ATJ 9378§	MR 81	ATJ 9485§	MN 5	BLS 108	MR 80·1
ATJ 8414§	MR 52	ATJ 8572§	MK 3	ATJ 9379§	MR 5·1	ATJ 9486§	MR 58·1	BLS 110	MF 11
ATJ 8419§	MR 53	ATJ 8572§	MK 5	ATJ 9379§	MR 8·1	ATJ 9487§	MR 58·1	BLS 110	MF 14
ATJ 8422§	MR 48	ATJ 8573§	MR 53	ATJ 9380§	MR 27	ATJ 9488§	MR 78·1	BLS 110	MF 17
ATJ 8432§	MR 41	ATJ 8574§	MR 53	ATJ 9380§	MR 28	ATJ 9490§	MF 20	BLS 110	MR 82·1
ATJ 8433§	MR 46	ATJ 8575§	MR 53	ATJ 9381§	MS 7	ATJ 9490§	MR 61·1	BLS 110	MS 9
ATJ 8434§	MR 46	ATJ 8576§	MR 53	ATJ 9383§	MG 1	ATJ 9491§	MF 20	BLS 110	MS 10
ATJ 8435§	MR 47	ATJ 8584§	MR 53	ATJ 9383§	MG 4	ATJ 9491§	MR 61·1	BLS 110	MS 14
ATJ 8436§	MR 47	ATJ 8585§	MR 52	ATJ 9384§	MF 29	ATJ 9492§	MF 22	BLS 112	MR 35
ATJ 8437§	MR 47	ATJ 8586§	MR 52	ATJ 9384§	MM 4	ATJ 9492§	MF 24	BLS 112	MR 72·1
ATJ 8438§	MR 47	ATJ 8588§	MN 6	ATJ 9389§	MF 22	ATJ 9492§	MR 62	BLS 114	MR 13·2
ATJ 8441§	MF 25	ATJ 8588§	MR 52	ATJ 9389§	MR 61·1	ATJ 9492§	MR 63	BLS 114	MR 17
ATJ 8441§	MR 60	ATJ 8592§	MR 53	ATJ 9392§	MF 5	ATJ 9493§	MF 24	BLS 114	MR 18
ATJ 8441§	MR 64	ATJ 8593§	MR 53	ATJ 9392§	MF 24	ATJ 9494§	MF 23	BLS 114	MR 19
ATJ 8446§	MM 6	ATJ 8594§	MR 53	ATJ 9392§	MF 27	ATJ 9495§	MF 26	BLS 124	MR 13·2
ATJ 8447§	MM 6	ATJ 8597§	MR 51	ATJ 9392§	MR 63	ATJ 9497§	MR 23	BLS 124	MR 17
ATJ 8451§	MM 6	ATJ 8627§	MR 53	ATJ 9392§	MR 65	ATJ 9498§	MR 23	BLS 124	MR 18
ATJ 8452§	MN 4	ATJ 8628§	MR 51	ATJ 9397§	MF 20	ATJ 9499§	MR 23	BLS 124	MR 19
ATJ 8461§	MN 5	ATJ 8630§	MN 3	ATJ 9397§	MF 22	ATJ 9500§	MR 1·2	BLS 128	MF 33
ATJ 8462§	MN 5	ATJ 8631§	MN 3	ATJ 9397§	MR 61·1	ATJ 9500§	MR 5·1	BLS 128	MR 68
ATJ 8465§	MN 5	ATJ 8638§	MN 5·1	ATJ 9398§	MF 21	ATJ 9501§	MR 81		
ATJ 8468§	MN 5	ATJ 8651§	MM 6	ATJ 9399§	MF 22	ATJ 9501§	MR 81·1	BMK 449§	MK 3
ATJ 8471§	MR 56·1	ATJ 8653§	MM 6	ATJ 9399§	MR 61·1	ATJ 9502§	MR 31·1	BMK 449§	MK 5
ATJ 8472§	MR 56·1	ATJ 8683	MK 4	ATJ 9400§	MF 22	ATJ 9503§	MR 72·1	BMK 699	MR 51
ATJ 8473§	MR 56·1	ATJ 8684	MK 1·1	ATJ 9400§	MR 61·1	ATJ 9504§	MR 56·1	BMK 1094§	ML 4
ATJ 8474§	MR 56·1	ATJ 8686	MK 7	ATJ 9401§	MF 22	ATJ 9505§	MR 56·1		
ATJ 8475§	MK 2	ATJ 8687	MK 7	ATJ 9401§	MR 61·1	ATJ 9506§	MR 2	BNN 105	MA 1·1
ATJ 8476§	MK 4	ATJ 9251§	MR 14·1	ATJ 9402§	MF 22	ATJ 9507§	MR 13		
ATJ 8477§	MR 48·1	ATJ 9252§	MH 5	ATJ 9402§	MR 61·1	ATJ 9508§	MR 13	BRP 1106	MN 1·1
ATJ 8477§	MR 55	ATJ 9263§	MF 1·1	ATJ 9403§	MF 22	ATJ 9510§	MR 48		
ATJ 8480§	MM 2	ATJ 9285§	MM 2	ATJ 9403§	MR 61·1	ATJ 9511§	MR 48	BTJ 2220§	ML 3
ATJ 8481§	MM 2	ATJ 9285§	MM 4	ATJ 9404§	MF 22	ATJ 9512§	MO 4	BTJ 2762§	ML 3
ATJ 8482§	MR 56·1	ATJ 9286§	MM 2	ATJ 9404§	MR 61·1	ATJ 9514§	MR 59·1		
ATJ 8483§	MR 56·1	ATJ 9286§	MM 4	ATJ 9405§	MF 22	ATJ 9515§	MR 59·1	CA 1252	MJ 4
ATJ 8484§	MR 56·1	ATJ 9287§	MM 2	ATJ 9405§	MR 61·1	ATJ 9516§	MR 78·1		
ATJ 8485§	MR 56·1	ATJ 9287§	MM 4	ATJ 9406§	MF 22	ATJ 9517§	MR 78·1	CB 2015	MJ 4
ATJ 8486§	MK 1·1	ATJ 9289§	MM 2	ATJ 9406§	MR 61·1	ATJ 9518§	MR 33		
ATJ 8487§	MK 1·1	ATJ 9289§	MM 4	ATJ 9407§	MF 22	ATJ 9523§	MR 58·1	CCN 112	MR 30
ATJ 8488§	MK 1·1	ATJ 9290§	MM 1	ATJ 9407§	MR 61·1	ATJ 9525§	MR 19	CCN 112	MR 34
ATJ 8494§	MK 2	ATJ 9290§	MM 2	ATJ 9408§	MF 22	ATJ 9526§	MK 2	CCN 114	MR 35
ATJ 8495§	MK 4	ATJ 9290§	MM 4	ATJ 9408§	MR 61·1	ATJ 9527§	MF 2	CCN 114	MR 71
ATJ 8496§	MK 7	ATJ 9291§	MJ 5	ATJ 9409§	MF 22	ATJ 9528§	MR 31·1	CCN 114	MS 3
ATJ 8499§	MR 47	ATJ 9297§	MH 4	ATJ 9409§	MR 61·1	ATJ 9529§	MF 23	CCN 118	MS 4
ATJ 8500§	MR 47	ATJ 9297§	MR 37	ATJ 9410§	MF 22	ATJ 9530§	ML 1	CCN 120	MS 7
ATJ 8500§	MR 48·1	ATJ 9302§	MR 22	ATJ 9410§	MR 61·1	ATJ 9531§	MR 72·1	CCN 120	MS 12
ATJ 8501§	MR 46	ATJ 9303§	MR 22	ATJ 9411§	MR 8·1	ATJ 9532§	MR 83	CCN 122	MS 4
ATJ 8502§	MR 46	ATJ 9307§	MF 32	ATJ 9411§	MR 13	ATJ 9533§	MR 83	CCN 128	MF 9

§ Parts peculiar to Tractor only

Part Number Index—*continued*

Part Number	Page
CCN 128	MF 15
CCN 128	MS 6
CCN 128	MS 10
CCN 128	MS 11
CCN 132	MS 5
CCN 221	MR 80
CCN 221	MR 80·1
CCN 223	MR 11
CCN 223	MR 13·1
CCN 226	MR 78·1
CCN 248	MS 10
CHR 0407	MR 53
CHR 0409	MR 48
CHR 0409	MR 48·1
CLZ 0317	MR 22
CLZ 0410	MA 4
CLZ 0410	MR 85
CLZ 0411	MR 22
CLZ 0412	MA 3
CLZ 0412	MA 4
CLZ 0412	MK 6
CLZ 0412	MR 85
CLZ 0416	MR 22
CLZ 0427	MF 8
CLZ 0427	MF 14
CLZ 0427	MS 4
CLZ 0515	MR 59·1
CLZ 0525	MA 3
CLZ 0525	MA 4
CLZ 0525	MR 85
CLZ 0833	MF 33
CLZ 0833	MR 68
CMN 0308	MF 9
CMN 0308	MF 15
CMN 0308	MS 6
CMN 0308	MS 11
CMN 0412	MJ 1
CMN 0616	MJ 4
CMN 0616	MJ 5
CMN 0616	MJ 7
CMN 0616	MR 70
CMN 0728	MJ 1
CMN 0728	MN 8
CMN 0732	MN 8
CMN 0736	MJ 6
CMN 0736	MO 1·1
CMN 0736	MR 35
CMZ 0612	MR 69
CNZ 102	ML 1
CNZ 102	ML 3
CNZ 102	MR 48·1
CPS 0204	MJ 4
CPS 0204	MJ 7
CPS 0204	MR 70
CPS 0206	MR 70
CPS 0412	MR 70
CPS 0628	MF 22
CPS 0628	MF 24
CPS 0628	MF 27
CPS 0628	MR 62
CPS 0628	MR 63
CPS 0628	MR 65
CRS 0414	MR 1·2
CRS 0414	MR 2
CRS 0414	MR 3
CRS 0414	MR 6
CRS 0414	MR 9
CRS 0422	MR 26
DAP 2620	MR 22
ESC 035	MF 8
ESC 035	MR 1·2
ESC 035	MR 3
ESC 035	MR 5·1
ESC 035	MR 6
ESC 035	MR 8·1
ESC 035	MR 13
ESC 035	MS 5
ESC 040	MF 7
ESC 040	MF 8
ESC 040	MF 14
ESC 040	MF 15
ESC 040	MS 5
ESC 040	MS 6
ESC 040	MS 10
ESC 040	MS 11
ESC 045	MF 27
ESC 045	MR 65
ESC 050	MF 10
ESC 050	MF 16
ESC 050	MS 7
ESC 050	MS 12
FNN 103	MS 2
FNN 103	MS 3
FNN 104	MN 1·1
FNN 104	MR 79
FNN 105	MA 1·1
FNN 105	MC 6
FNN 105	MD 4
FNN 105	MD 5
FNN 105	MF 18
FNN 105	MJ 5
FNN 105	MK 6
FNN 105	MN 5
FNN 105	MR 1·2
FNN 105	MR 2
FNN 105	MR 3
FNN 105	MR 4
FNN 105	MR 7
FNN 105	MR 11
FNN 105	MR 22
FNN 105	MR 34
FNN 105	MR 56·1
FNN 105	MR 57
FNN 105	MR 59·1
FNN 105	MR 60
FNN 105	MR 64
FNN 105	MR 78·1
FNN 105	MS 8
FNN 105	MS 13
FNN 106	ME 1·1
FNN 106	MF 32
FNN 106	MJ 3
FNN 106	MJ 4
FNN 106	MJ 5
FNN 106	MJ 6
FNN 106	MJ 7
FNN 106	MN 4
FNN 106	MR 31·1
FNN 106	MR 32
FNN 106	MR 34
FNN 106	MR 35
FNN 106	MR 70
FNN 106	MS 1·1
FNN 106	MS 2
FNN 107	MF 31
FNN 107	MG 1
FNN 107	MH 2
FNN 107	MJ 1
FNN 107	MJ 5
FNN 107	MJ 6
FNN 107	MM 2
FNN 107	MN 3
FNN 107	MN 8
FNN 107	MO 1·1
FNN 107	MR 32
FNN 107	MR 35
FNN 107	MR 36
FNN 107	MR 58·1
FNN 107	MR 67
FNN 107	MR 78·1
FNN 107	MR 81
FNN 108	MG 4
FNN 108	MH 5
FNN 108	MM 6
FNN 108	MR 1·2
FNN 108	MR 2
FNN 108	MR 3
FNN 108	MR 6
FNN 108	MR 10
FNN 108	MR 13
FNN 108	MR 13·1
FNN 108	MR 13·2
FNN 108	MR 14·1
FNN 108	MR 15
FNN 108	MR 16
FNN 109	MH 2
FNN 109	MH 5
FNN 109	MJ 4
FNN 109	MJ 5
FNN 109	MJ 7
FNN 109	MN 5
FNN 109	MR 3
FNN 109	MR 8·1
FNN 109	MR 34
FNN 109	MR 70
FNN 110	MO 1·1
FNN 110	MR 13·3
FNN 110	MR 24
FNN 110	MR 35
FNN 110	MR 36
FNN 110	MR 37
FNN 112	MF 10
FNN 112	MH 1
FNN 112	MH 3
FNN 112	MO 1·1
FNN 112	MO 2
FNN 112	MO 3
FNN 112	MO 4
FNN 112	MO 5
FNN 112	MR 1·2
FNN 112	MR 2
FNN 112	MR 3
FNN 112	MR 5·1
FNN 112	MR 8·1
FNN 112	MR 13·4
FNN 112	MR 24
FNN 112	MR 26
FNN 112	MR 29
FNN 112	MR 30
FNN 112	MR 35
FNN 112	MR 81
FNN 122	MO 4
FNN 122	MO 5
FNN 204	MA 3
FNN 204	MA 4
FNN 204	MR 8·1
FNN 204	MR 85
FNN 205	MK 6
FNN 206	MF 25
FNN 206	MF 28
FNN 206	MJ 7
FNN 206	MR 59·1
FNN 206	MR 60
FNN 206	MR 64
FNN 206	MR 66
FNN 206	MS 1·1
FNN 208	MR 69
FNN 214	MH 2
FNN 214	MH 5
FNN 306	MF 7
FNN 307	MF 18
FNN 307	MF 19
FNN 307	MR 14·1
FNN 307	MS 8
FNN 307	MS 13
FNN 310	MG 1
FNN 310	MG 4
FNN 312	MH 2
FNN 314	MH 2
FNN 314	MH 5
FNN 406	MN 4
FNN 408	MR 80
FNN 408	MR 80·1
FNN 409	MH 2
FNN 409	MH 5
FNN 410	MJ 4
FNN 410	MJ 5
FNN 410	MJ 7
FNN 410	MR 28
FNN 410	MR 35
FNN 410	MR 70
FNN 410	MR 80
FNN 410	MR 80·1
FNN 412	MF 30
FNN 412	MF 32
FNN 412	MF 33
FNN 412	MR 67
FNN 412	MS 7
FNN 412	MS 12
FNN 414	MH 1
FNN 505	MR 75
FNN 509	MR 77
FNZ 103	MC 4
FNZ 103	MK 3
FNZ 103	MK 4
FNZ 103	MK 5
FNZ 103	MK 6
FNZ 103	MR 43
FNZ 103	MR 45
FNZ 103	MR 48
FNZ 103	MR 48·1
FNZ 103	MR 51
FNZ 103	MR 54
FNZ 103	MR 55
FNZ 103	MR 81
FNZ 104	MA 3
FNZ 104	MK 1·1
FNZ 104	MK 7
FNZ 104	MN 3
FNZ 104	MN 6
FNZ 104	MR 24
FNZ 104	MR 26
FNZ 104	MR 29
FNZ 104	MR 44
FNZ 104	MR 45
FNZ 104	MR 48
FNZ 104	MR 48·1
FNZ 104	MR 52
FNZ 104	MR 55
FNZ 104	MR 85
FNZ 105	MA 2
FNZ 105	MD 3
FNZ 105	MK 1·1
FNZ 105	MK 4
FNZ 105	MN 6
FNZ 105	MR 28
FNZ 105	MR 48·1
FNZ 105	MR 52
FNZ 105	MR 59·1
FNZ 105	MR 75
FNZ 105	MR 84
FNZ 106	MC 5
FNZ 106	MF 25
FNZ 106	MN 4
FNZ 106	MR 39·1
FNZ 106	MR 48·1
FNZ 106	MR 55
FNZ 106	MR 60
FNZ 106	MR 64
FNZ 106	MR 67
FNZ 106	MR 72·1
FNZ 107	MN 4
FNZ 109	MF 1·1
FNZ 109	MR 13·3
FNZ 109	MR 22
FNZ 110	MH 1
FNZ 110	MH 4
FNZ 110	MM 4
FNZ 110	MM 6
FNZ 110	MR 37
FNZ 204	MC 6
FNZ 204	MN 2
FNZ 204	MR 45
FNZ 204	MR 48
FNZ 205	MF 33
FNZ 205	MR 68
FNZ 206	MF 28
FNZ 206	MR 66
FNZ 208	MF 11
FNZ 208	MF 17
FNZ 208	MR 83
FNZ 208	MS 9
FNZ 208	MS 14
FNZ 212	MH 6
FNZ 212	MR 38
FNZ 212	MR 81
FNZ 304	MA 2
FNZ 304	MR 84
FNZ 305	MC 6
FNZ 306	MA 2
FNZ 306	MC 5
FNZ 306	MR 84
FNZ 406	MR 44
FNZ 406	MR 48
FNZ 408	MH 6
FNZ 408	MR 38
FNZ 408	MR 81
FNZ 412	MR 71
FNZ 2212	MH 6
FNZ 2212	MR 38
FNZ 2212	MR 81
1G 4116	MF 30
1G 4162	MF 30
8G 531	MR 77
8G 548	MK 6
8G 548	ML 3
8G 548	ML 4
8G 8464§	MF 30
8G 8572§	MR 69
8G 8629§	MF 31
8G 8629§	MR 67
8G 8630§	MF 31
8G 8630§	MR 67
8G 8631§	MR 69
8G 8632§	MR 69
8G 8633§	MF 30
8G 8956§	MF 33
8G 8956§	MR 68
8G 8957§	MF 33
8G 8957§	MR 68
11G 2007	MR 45
11G 2007	MR 48
18G 8006§	MR 69
18G 8235§	MR 16
18G 8238§	MR 33
18G 8238§	MR 68
18G 8239§	MR 33
18G 8239§	MR 68
18G 8339	MR 80·1
18G 8340	MR 80
24G 1345	ML 3
24G 1345	ML 4
88G 355	MN 1·1
1H 4039	MF 30
2H 1640	MR 45
2H 2704	MK 3
2H 2704	MK 5
2H 2883	MP 1
2H 3406	MK 3
2H 3406	MK 5
2H 4500	MR 78·1
3H 1300	MK 4
3H 2129	MF 8
3H 2129	MF 14
3H 2361	MR 53
3H 2825	ML 3
3H 3098	ML 2
3H 3098	MR 45
3H 3098	MR 48
7H 106	MD 2
7H 1758	MR 39·1
7H 1759	MR 39·1
7H 1764	MR 39·1
7H 1765	MR 39·1
7H 1836	MR 39·1
7H 1837	MR 39·1
7H 1838	MR 39·1
7H 1839	MR 39·1
7H 1840	MR 39·1
7H 1954	MD 3
7H 1955	MD 3

§ Parts peculiar to Tractor only

Part Number Index—*continued*

Part Number	Page	Part Number	Page	Part Number	Page	Part Number	Page	Part Number	Page
7H 1956	MD 3	7H 7818	MR 69	17H 2001§	MR 43	17H 6059	MR 80·1	17H 6452§	MR 80
7H 1957	MD 3	13H 24	MP 1	17H 2002§	MR 43	17H 6062	MR 80	17H 6452§	MR 80·1
7H 2503	MR 73	13H 69	MR 55	17H 2003§	MR 43	17H 6062	MR 80·1	17H 6453§	MR 80
7H 2503	MR 77	13H 477	ML 4	17H 2004§	MR 43	17H 6063	MR 80	17H 6453§	MR 80·1
7H 2547	MR 72·1	13H 1526§	MC 5	17H 2105	ML 4	17H 6063	MR 80·1	17H 6462§	MR 78·1
7H 2549	MR 72·1	13H 1605	MK 3	17H 2105	MR 57	17H 6069	MR 80	17H 6463§	MR 78·1
7H 2566	MR 73	13H 1605	MK 5	17H 2201	MR 69	17H 6069	MR 80·1	17H 6464§	MR 78·1
7H 2567	MR 73	13H 1694	ML 4	17H 2877	MR 39·1	17H 6073	MR 80	17H 6465§	MR 78·1
7H 2569	MR 77	13H 1904	MD 2	17H 2980	MR 42	17H 6073	MR 80·1	17H 6466§	MR 78·1
7H 2573	MR 72·1	13H 1904	MR 39·1	17H 3176	MR 76	17H 6074	MR 80	17H 6467§	MR 78·1
7H 2573	MR 77	13H 1905	MD 2	17H 3477§	MR 81	17H 6074	MR 80·1	17H 6468§	MR 78·1
7H 3465	MH 6	13H 1905	MR 39·1	17H 3477	MR 81·1	17H 6078	MR 80	17H 6469§	MR 78·1
7H 3465	MR 38	13H 2782	MR 55	17H 4429	MF 30	17H 6078	MR 80·1	17H 6470§	MR 78·1
7H 3465	MR 81			17H 5048	MR 55	17H 6079	MR 80	17H 6471§	MR 78·1
7H 3465	MR 81·1	17H 4	MR 39·1	17H 5082§	MR 42	17H 6079	MR 80·1	17H 6472§	MR 78·1
7H 3466	MH 6	17H 9	MR 78·1	17H 5145	MR 41	17H 6080	MR 80	17H 6473§	MR 78·1
7H 3466	MR 38	17H 10	MR 78·1	17H 5146	MR 41	17H 6080	MR 80·1	17H 6489	MR 12
7H 3466	MR 81	17H 12	MR 79	17H 5216	MR 51	17H 6084	MR 80	17H 6489	MR 13·1
7H 3466	MR 81·1	17H 13	MR 79	17H 5287	MK 3	17H 6084	MR 80·1	17H 6498	MR 80
7H 3552	MH 6	17H 14	MR 79	17H 5287	MK 5	17H 6086	MR 80	17H 6498	MR 80·1
7H 3552	MR 38	17H 15	MR 79	17H 5288	MK 3	17H 6086	MR 80·1	17H 6554§	MR 80
7H 3552	MR 81	17H 16	MR 79	17H 5288	MK 5	17H 6087	MR 80	17H 6554§	MR 80·1
7H 3552	MR 81·1	17H 17	MR 79	17H 5306	MR 50	17H 6087	MR 80·1	17H 6555§	MR 80
7H 3656§	MH 6	17H 18	MR 79	17H 5399§	MR 41	17H 6088	MR 80	17H 6555§	MR 80·1
7H 3656§	MR 38	17H 20	MR 79	17H 5400	MR 41	17H 6088	MR 80·1	17H 6985§	MM 2
7H 3657§	MH 6	17H 21	MR 79	17H 5400	MR 50	17H 6089	MR 80	17H 6985§	MM 4
7H 3657§	MR 38	17H 22	MR 78·1	17H 5401	MR 40·1	17H 6089	MR 80·1	17H 6986§	MM 2
7H 3657§	MR 81	17H 22	MR 79	17H 5401	MR 41	17H 6091	MR 80	17H 6986§	MM 4
7H 3657§	MR 81·1	17H 23	MR 79	17H 5402§	MR 41	17H 6091	MR 80·1	17H 6987§	MM 2
7H 5062	MR 41	17H 24	MR 79	17H 5402	MR 50	17H 6092	MR 80	17H 6987§	MM 4
7H 5120	MR 51	17H 25	MR 79	17H 5403	MR 41	17H 6992	MR 80·1	17H 6988§	MM 2
7H 5123	MR 51	17H 27	MR 78·1	17H 5403	MR 50	17H 6169	MR 79	17H 6988§	MM 4
7H 5167	MR 40·1	17H 28	MR 79	17H 5490	MR 55	17H 6172	MR 79	17H 6989§	MM 2
7H 5167	MR 41	17H 35	MR 78·1	17H 5491	MR 55	17H 6173	MR 79	17H 6989§	MM 4
7H 5167	MR 50	17H 38	MR 78·1	17H 5494	MR 41	17H 6174	MR 79	17H 6990§	MM 2
7H 5285	MR 40·1	17H 39	MR 78·1	17H 5494	MR 50	17H 6175	MR 79	17H 6991§	MM 2
7H 5285§	MR 50	17H 43	MR 79	17H 5495§	MR 40·1	17H 6176	MR 79	17H 7022	MF 31
7H 5349§	MR 40·1	17H 44	MR 78·1	17H 5495§	MR 41	17H 6195	MR 79	17H 7022	MR 67
7H 5351	MR 42	17H 46	MR 79	17H 5553§	MR 42	17H 6297	MR 12	17H 7023§	MF 31
7H 5352	MR 42	17H 48	MR 78·1	17H 5554§	MR 42	17H 6297	MR 13·1	17H 7024§	MF 32
7H 5353	MR 42	17H 90§	ML 3	17H 5555§	MR 42	17H 6340	MR 78·1	17H 7024§	MR 67
7H 5354	MR 42	17H 91§	ML 3	17H 5556§	MR 42	17H 6356	MR 80	17H 7025§	MF 31
7H 5355	MR 42	17H 92§	ML 3	17H 5557§	MR 42	17H 6356	MR 80·1	17H 7025§	MR 67
7H 5356	MR 42	17H 172§	MD 3	17H 5558§	MR 42	17H 6357	MR 80	17H 7026§	MF 31
7H 5485	MR 41	17H 173§	MD 3	17H 5559§	MR 42	17H 6357	MR 80·1	17H 7026§	MR 67
7H 5485	MR 50	17H 174§	MD 3	17H 5560§	MR 42	17H 6369	MR 80	17H 7027§	MF 32
7H 5486	MR 41	17H 175§	MD 3	17H 5561§	MR 42	17H 6369	MR 80·1	17H 7027§	MR 67
7H 5523	MR 41	17H 176§	MD 3	17H 5562§	MR 42	17H 6370	MR 80	17H 7028§	MF 32
7H 5582	MR 40·1	17H 177§	MD 3	17H 5563§	MR 42	17H 6370	MR 70·1	17H 7028§	MR 67
7H 5582	MR 41	17H 180§	MD 4	17H 5583§	ML 2	17H 6371	MR 80	17H 7030§	MF 31
7H 5582	MR 43	17H 181	MD 4	17H 5583§	MR 45	17H 6428§	MR 80	17H 7031§	MF 32
7H 5588	MR 40·1	17H 182§	MD 4	17H 5584§	MR 40·1	17H 6429§	MR 80	17H 7031§	MR 67
7H 5647	MR 75	17H 199	MD 4	17H 5584§	MR 41	17H 6429§	MR 80·1	17H 7032§	MF 32
7H 5681	MR 75	17H 302§	MR 15	17H 5588	ML 2	17H 6430§	MR 80	17H 7032§	MR 67
7H 5686	MR 72·1	17H 303§	MR 15	17H 5588	ML 3	17H 6431§	MR 80	17H 7034§	MF 31
7H 5689	MR 76	17H 307§	MR 15	17H 5588	MR 45	17H 6432§	MR 80	17H 7034§	MR 67
7H 5700	MR 74	17H 308§	MR 15	17H 5589	ML 3	17H 6433§	MR 80	17H 7035§	MF 31
7H 5700	MR 75	17H 719	MR 78·1	17H 5589	MR 55	17H 6434§	MR 80	17H 7035§	MR 67
7H 5701	MR 74	17H 720	MR 78·1	17H 5593	MR 51	17H 6435§	MR 80	17H 7036§	MF 31
7H 5706	MR 72·1	17H 865§	ML 3	17H 5594	MR 45	17H 6436§	MR 80	17H 7037§	MF 32
7H 5712	MR 75	17H 866§	ML 3	17H 5595	MR 55	17H 6437§	MR 80	17H 7038§	MF 32
7H 5720	MR 74	17H 919§	ML 3	17H 5596§	MR 55	17H 6437§	MR 80·1	17H 7038§	MR 67
7H 5997§	ML 1	17H 920§	ML 3	17H 5668	MR 72·1	17H 6438§	MR 80	17H 7039§	MF 32
7H 5998§	ML 1	17H 921§	ML 3	17H 5688	MR 74	17H 6438§	MR 80·1	17H 7039§	MR 67
7H 6630	MR 80	17H 922§	ML 3	17H 5693	MR 72·1	17H 6439§	MR 80	17H 7725§	MF 31
7H 6633	MR 80	17H 923§	ML 3	17H 5712	MR 74	17H 6439§	MR 80·1	17H 7725§	MR 67
7H 6633	MR 80·1	17H 924§	ML 3	17H 5735	MR 72·1	17H 6440§	MR 80	17H 7726§	MF 31
7H 6649	MR 80	17H 925§	ML 3	17H 5747	MR 77	17H 6440§	MR 80·1	17H 7726§	MR 67
7H 6649	MR 80·1	17H 926§	ML 3	17H 6044	MR 80	17H 6441§	MR 80	17H 7727§	MF 32
7H 7315	MR 69	17H 927§	ML 3	17H 6045	MR 80	17H 6441§	MR 80·1	17H 7727§	MR 67
7H 7370	MR 69	17H 932	ML 3	17H 6045	MR 80·1	17H 6442§	MR 80	17H 7728	MF 31
7H 7385	MR 69	17H 933§	ML 3	17H 6046	MR 80	17H 6442§	MR 80·1	17H 7728	MR 67
7H 7398	MF 31	17H 960§	ML 3	17H 6047	MR 80	17H 6443	MR 80	17H 7745§	MR 69
7H 7398	MR 67	17H 1257§	MD 5	17H 6047	MR 80·1	17H 6443§	MR 80·1	17H 7746§	MR 69
7H 7399	MR 69	17H 1258§	MD 5	17H 6048	MR 80	17H 6444§	MR 80	17H 7749§	MR 69
7H 7462	MR 69	17H 1259§	MD 5	17H 6048	MR 80·1	17H 6444§	MR 80·1	17H 7750§	MR 69
7H 7570	MR 69	17H 1260§	MD 5	17H 6049	MR 80	17H 6445§	MR 80	17H 7751§	MR 69
7H 7572	MR 69	17H 1261§	MD 5	17H 6049	MR 80·1	17H 6445§	MR 80·1	17H 7752	MR 69
7H 7594	MR 69	17H 1304	MR 57	17H 6050	MR 80	17H 6446§	MR 80	17H 7753§	MR 69
7H 7603	MR 69	17H 1448§	MR 23	17H 6050	MR 80·1	17H 6446§	MR 80·1	17H 7754§	MR 69
7H 7604	MR 69	17H 1484§	MR 15	17H 6052	MR 80	17H 6447§	MR 80	17H 7756§	MR 69
7H 7605	MR 69	17H 1677	ML 3	17H 6052	MR 80·1	17H 6447§	MR 80·1	17H 7757§	MR 69
7H 7606	MR 69	17H 1790	MR 56·1	17H 6055	MR 80·1	17H 6449§	MR 80	17H 7758§	MR 69
7H 7607	MR 69	17H 1821	ML 3	17H 6057	MR 80	17H 6449§	MR 80·1	17H 7759§	MR 69

§ Parts peculiar to Tractor only

Part Number Index—*continued*

Part Number	Page	Part Number	Page	Part Number	Page	Part Number	Page	Part Number	Page
17H 7760§	MR 69	27H 3575§	ML 4	27H 5671§	MR 76	27H 6510§	MM 1	37H 1571	MR 68
17H 7761§	MR 69	27H 3576§	ML 4	27H 5686	MR 74	27H 6510§	MM 4	37H 1822	MN 5·1
17H 7831§	MR 69	27H 3669§	ML 4	27H 5687	MR 74	27H 6511§	MM 1	37H 5000	MK 6
17H 7888§	MR 69	27H 3670§	ML 4	27H 5688	MR 74	27H 6511§	MM 4	37H 5000	ML 2
17H 8058	MN 6	27H 3671§	ML 4	27H 5691	MR 74	27H 6524§	MM 3	37H 5002	MR 40·1
17H 8373§	MK 7	27H 3672§	ML 4	27H 5692	MR 74	27H 6563§	MR 51	37H 5004§	MR 55
17H 8375§	MK 7	27H 3698§	ML 4	27H 5693	MR 74	27H 6564§	MR 51	37H 5007§	MR 55
17H 8739§	MR 39·1	27H 3699§	ML 4	27H 5694	MR 74	27H 6565§	MR 51	37H 5013	MR 42
17H 8760§	MN 6	27H 3765§	MR 80	27H 5695	MR 74	27H 6714§	MN 5·1	37H 5016	MR 42
17H 8761§	MN 6	27H 3977	MR 69	27H 5696	MR 74	27H 6717§	MN 5·1	37H 5046§	MA 5
17H 9172§	MK 6	27H 3992§	MR 80·1	27H 5697	MR 74	27H 6718§	MN 5·1	37H 5046§	ML 1
17H 9280§	MR 78·1	27H 4146§	MR 41	27H 5698	MR 74	27H 6719§	MN 5·1	37H 5047§	ML 1
		27H 4146§	MR 50	27H 5719	MR 73	27H 6721§	MN 5·1	37H 5051	ML 3
27H 39	MR 56·1	27H 4501§	MR 49	27H 5721	MR 73	27H 6722§	MN 5·1	37H 5051	MR 55
27H 387	ML 3	27H 4502§	MR 49	27H 5729	MR 76	27H 6723§	MN 5·1	37H 5095§	ML 1
27H 387	MR 57	27H 4503§	MR 49	27H 5731	MR 76	27H 6724§	MN 5·1	37H 5096§	MR 40·1
27H 665§	ML 3	27H 4504§	MR 49	27H 5747§	MR 72·1	27H 6725§	MN 5·1	37H 5097§	MR 40·1
27H 972	ML 3	27H 4505§	MR 49	27H 5748§	MR 72·1	27H 6726§	MN 5·1	37H 5098§	MR 40·1
27H 990	MR 57	27H 4506§	MR 49	27H 5749§	MR 72·1	27H 6727§	MN 5·1	37H 5099§	MR 40·1
27H 1146	MR 57	27H 4507§	MR 49	27H 5750§	MR 72·1	27H 6728§	MN 5·1	37H 5100§	MR 40·1
27H 1330	MD 3	27H 4508§	MR 49	27H 5751§	MR 72·1	27H 6729§	MN 5·1	37H 5101§	MR 40·1
27H 1338	MD 4	27H 4509§	MR 49	27H 5752§	MR 72·1	27H 6730§	MN 5·1	37H 5102§	MR 40·1
27H 1985§	MR 15	27H 4510§	MR 49	27H 5753§	MR 72·1	27H 6731§	MN 5·1	37H 5103§	MR 40·1
27H 1987§	MR 15	27H 4511§	MR 49	27H 5754§	MR 72·1	27H 6732§	MN 5·1	37H 5104§	MR 40·1
27H 1990§	MR 15	27H 4512§	MR 49	27H 5755§	MR 72·1	27H 6733§	MN 5·1	37H 5104§	MR 41
27H 1991§	MR 15	27H 4513§	MR 49	27H 5756§	MR 72·1	27H 6734§	MN 5·1	37H 5105§	MR 40·1
27H 1992§	MR 15	27H 4514§	MR 49	27H 5757§	MR 72·1	27H 6735§	MN 5·1	37H 5106§	MR 42
27H 1996§	MR 57	27H 4515§	MR 49	27H 5758§	MR 72·1	27H 6736§	MN 5·1	37H 5107	MR 43
27H 2124§	MK 1·1	27H 4516§	MR 49	27H 5759§	MR 72·1	27H 6737§	MN 5·1	37H 5108§	MR 55
27H 2129§	MR 56·1	27H 4517§	MR 49	27H 5760§	MR 72·1	27H 6738§	MN 5·1	37H 5109§	MR 55
27H 2267§	MD 3	27H 4518§	MR 49	27H 5361§	MR 72·1	27H 6739§	MN 5·1	37H 5116§	MR 55
27H 2268§	MD 3	27H 4519§	MR 49	27H 5762§	MR 72·1	27H 6767§	MR 40·1	37H 5120§	ML 1
27H 2269§	MD 3	27H 4520§	MR 49	27H 5763§	MR 72·1	27H 7464	MR 69	37H 5121§	MR 40·1
27H 2270§	MD 3	27H 4625	MR 51	27H 5764§	MR 72·1	27H 7475§	MF 32	37H 5121§	MR 41
27H 2271§	MD 3	27H 4642§	MR 69	27H 5765§	MR 72·1	27H 7475§	MR 67	37H 5122§	MR 41
27H 2272§	MD 3	27H 4726§	MR 49	27H 5766§	MR 72·1	27H 7626§	MJ 7	37H 5123	MR 42
27H 2273§	MD 3	27H 4727§	MR 49	27H 5767§	MR 72·1	27H 7626§	MR 70	37H 5124	MR 42
27H 2274§	MD 5	27H 4728§	MR 49	27H 5768§	MR 72·1	27H 7627§	MJ 7	37H 5125	MR 42
27H 2275§	MD 5	27H 4734§	MR 80·1	27H 5769§	MR 72·1	27H 7627§	MR 70	37H 5126§	ML 1
27H 2276§	MD 5	27H 4735§	MR 80·1	27H 5770§	MR 73	27H 7628§	MJ 7	37H 5128	MK 3
27H 2277§	MD 5	27H 4736§	MR 80·1	27H 5771§	MR 73	27H 7628§	MR 70	37H 5128	MK 5
27H 2321§	ML 1	27H 4737§	MR 80·1	27H 5772§	MR 73	27H 7629§	MJ 7	37H 5138	ML 3
27H 2321§	ML 4	27H 4738§	MR 80·1	27H 5773§	MR 73	27H 7629§	MR 70	37H 5139§	ML 3
27H 2322§	ML 1	27H 4739§	MR 80·1	27H 5774§	MR 73	27H 7630§	MJ 7	37H 5149	ML 2
27H 2322§	ML 4	27H 4740§	MR 80·1	27H 5775§	MR 73	27H 7630§	MR 70	37H 5271	MR 41
27H 2323§	ML 1	27H 4741§	MR 80·1	27H 5776§	MR 73	27H 7632§	MR 49	37H 5271	MR 50
27H 2323§	ML 4	27H 4761§	ML 1	27H 5777§	MR 73	27H 7640§	MJ 7	37H 5459	MR 43
27H 2433§	MH 6	27H 4761§	ML 4	27H 5778§	MR 73	27H 7640§	MR 70	37H 5459	MR 51
27H 2433§	MR 38	27H 4779§	MR 51	27H 5779§	MR 73	27H 7641§	MJ 7	37H 5538§	MR 42
27H 2910	MR 16	27H 4780§	MR 51	27H 5780§	MR 73	27H 7641§	MR 70	37H 5539§	MR 42
27H 2911	MR 16	27H 4781§	MR 51	27H 5781§	MR 73	27H 7642§	MJ 7	37H 5540§	MR 42
27H 2912	MR 16	27H 4782§	MR 51	27H 5782§	MR 73	27H 7642§	MR 70	37H 5541§	MR 42
27H 2913	MR 16	27H 4783§	MR 51	27H 5783§	MR 73	27H 7643§	MJ 7	37H 5542§	MR 42
27H 2914	MR 16	27H 4784§	MR 51	27H 5784§	MR 73	27H 7643§	MR 70	37H 5543§	MR 42
27H 2915	MR 16	27H 4785§	MR 51	27H 5785§	MR 73	27H 7652§	MN 5·1	37H 5588	MR 41
27H 2916	MR 16	27H 4786§	MR 51	27H 5786§	MR 73	27H 7653§	MN 5·1	37H 5600§	MR 74
27H 2917	MR 16	27H 4814	MR 79	27H 5787§	MR 73	27H 7743§	MF 33	37H 5601§	MR 74
27H 2918	MR 16	27H 4815	MR 79	27H 5788§	MR 73	27H 7743§	MR 68	37H 5602§	MR 74
27H 2919	MR 16	27H 4816	MR 79	27H 5789§	MR 73	27H 7781§	MR 39·1	37H 5603§	MR 75
27H 3361§	ML 1	27H 4817	MR 79	27H 5790§	MR 73	27H 8292§	MN 5·1	37H 5604§	MR 75
27H 3361§	ML 4	27H 4818	MR 79	27H 5791§	MR 73	27H 8709§	MK 1·1	37H 5605§	MR 75
27H 3362§	ML 1	27H 5026	MR 42	27H 5792§	MR 73	27H 8710§	MK 1·1	37H 5606§	MR 75
27H 3362§	ML 4	27H 5106	ML 3	27H 5793§	MR 73	27H 8828§	ML 1	37H 5607§	MR 75
27H 3497§	MF 33	27H 5106	MR 48·1	27H 5794§	MR 73	27H 9097§	MN 5·1	37H 5608§	MR 75
27H 3497§	MR 68	27H 5106	MR 55	27H 5795§	MR 73	27H 9142	MR 49	37H 5609§	MR 75
27H 3498§	MF 33	27H 5169	MR 55	27H 5796§	MR 73	27H 9184	MR 16	37H 5610§	MR 75
27H 3498§	MR 68	27H 5447§	MK 7	27H 5797§	MR 74	27H 9185	MR 16	37H 5611§	MR 75
27H 3499§	MF 33	27H 5448§	MK 7	27H 5798§	MR 74	27H 9272	MD 3	37H 5612§	MR 75
27H 3499§	MR 68	27H 5450§	MK 7	27H 5799§	MR 74			37H 5613§	MR 75
27H 3500§	MF 33	27H 5458§	MR 49	27H 6228§	MR 16	37H 378§	MR 15	37H 5614§	MR 75
27H 3500§	MR 68	27H 5463	MR 42	27H 6229§	MR 16	37H 543§	MR 15	37H 5615§	MR 75
27H 3501§	MF 33	27H 5646	MR 74	27H 6230§	MR 16	37H 569§	MR 56·1	37H 5616§	MR 75
27H 3501§	MR 68	27H 5659§	MR 76	27H 6231§	MR 16	37H 570§	MR 57	37H 5617§	MR 75
27H 3502§	MF 33	27H 5660§	MR 76	27H 6232§	MR 16	37H 1208§	MD 4	37H 5618§	MR 75
27H 3502§	MR 68	27H 5661§	MR 76	27H 6233§	MR 16	37H 1209§	MD 4	37H 5619§	MR 75
27H 3503§	MF 33	27H 5662§	MR 76	27H 6234§	MR 16	37H 1567	MF 33	37H 5620§	MR 75
27H 3503§	MR 68	27H 5663	MR 76	27H 6235§	MR 16	37H 1567	MR 68	37H 5621§	MR 75
27H 3504§	MF 33	27H 5664§	MR 76	27H 6262§	MR 61	37H 1568	MF 33	37H 5622§	MR 75
27H 3504§	MR 68	27H 5665§	MR 76	27H 6490§	MR 81	37H 1568	MR 68	37H 5623§	MR 75
27H 3505§	MF 33	27H 5666§	MR 76	27H 6506	MR 39·1	37H 1569	MF 33	37H 5624§	MR 75
27H 3505§	MR 68	27H 5667§	MR 76	27H 6508§	MM 1	37H 1569	MR 68	37H 5625§	MR 75
27H 3508§	MF 33	27H 5668§	MR 76	27H 6508§	MM 4	37H 1570	MF 33	37H 5626§	MR 75
27H 3508§	MR 68	27H 5669§	MR 76	27H 6509§	MM 1	37H 1570	MR 68	37H 5627§	MR 75
27H 3572§	ML 4	27H 5670§	MR 76	27H 6509§	MM 4	37H 1571	MF 33	37H 5628§	MR 75

§ Parts peculiar to Tractor only

Part Number Index—*continued*

Part Number	Page	Part Number	Page	Part Number	Page	Part Number	Page	Part Number	Page
37H 5629§	MR 75	97H 666§	MM 5	HBN 0708	MR 32	HBN 1220	MO 5	HNS 0507	MD 4
37H 5630§	MR 76	97H 667§	MM 5	HBN 0712	MF 2	HBN 1222	MO 1·1	HNS 0507	MD 5
37H 5631§	MR 76	97H 668§	MM 5	HBN 0712	MF 3	HBN 1222	MO 4	HNS 0507	MN 5
37H 5632§	MR 76	97H 669§	MM 5	HBN 0712	MF 4	HBN 1222	MO 5	HNS 0507	MR 33
37H 5633§	MR 76	97H 670§	MM 5	HBN 0712	MF 5	HBN 1224	MR 29	HNS 0507	MR 59·1
37H 5634§	MR 77	97H 671§	MM 5	HBN 0712	MF 20	HBN 1224	MR 30	HNS 0507	MR 83
37H 5635§	MR 77	97H 672§	MM 5	HBN 0712	MF 22	HBN 1226	MH 2	HNS 0508	MD 5
37H 5636§	MR 77	97H 673§	MM 5	HBN 0712	MF 24	HBN 1226	MH 5	HNS 0508	MR 44
37H 5637§	MR 77	97H 674§	MM 5	HBN 0712	MF 27	HBN 1230	MR 13·4	HNS 0508	MR 48
37H 5638§	MR 77	97H 2169§	MM 2	HBN 0712	MR 1·2	HBN 1230	MR 29	HNS 0508	MR 52
37H 5639§	MR 77	97H 2170§	MM 2	HBN 0712	MR 2	HBN 1230	MR 30	HNS 0508	MR 75
37H 5640§	MR 77	97H 2171§	MM 2	HBN 0712	MR 3	HBN 1230	MR 71	HNS 0509	MS 1·1
37H 5641§	MR 77	97H 2172§	MM 2	HBN 0712	MR 5·1	HBN 1232	MF 29	HNS 0510	MF 14
37H 5642§	MR 77			HBN 0712	MR 8·1	HBN 1232	MH 1	HNS 0510	MR 79
37H 5643§	MR 77	HBN 0412	ML 4	HBN 0712	MR 13·3	HBN 1232	MH 3	HNS 0605	MR 1·1
37H 5644§	MR 77	HBN 0412	MR 57	HBN 0712	MR 23	HBN 1232	MM 4	HNS 0605	MR 2
37H 5645§	MR 77	HBN 0509	MS 5	HBN 0712	MR 61·1	HBN 1234	MO 3	HNS 0605	MR 3
37H 5646§	MR 77	HBN 0509	MS 10	HBN 0712	MR 63	HBN 1236	MR 58·1	HNS 0605	MR 4
37H 5647§	MR 77	HBN 0510	MJ 1	HBN 0712	MR 65			HNS 0605	MR 7
37H 5648§	MR 72·1	HBN 0510	MJ 6	HBN 0712	MR 72·1	HBZ 0522	MR 13·2	HNS 0605	MR 10
37H 5648§	MR 73	HBN 0510	MR 28	HBN 0712	MR 77	HBZ 0522	MR 17	HNS 0605	MR 13·1
37H 5648§	MR 74	HBN 0513	MS 5	HBN 0714	MF 3	HBZ 0522	MR 18	HNS 0605	MR 13·4
37H 5648§	MR 76	HBN 0513	MS 10	HBN 0714	MF 5	HBZ 0522	MR 19	HNS 0605	MR 24
37H 5649§	MR 72·1	HBN 0514	MR 3	HBN 0714	MF 22	HBZ 0628	MR 16	HNS 0605	MR 33
37H 5649§	MR 73	HBN 0514	MR 8·1	HBN 0714	MF 24	HBZ 1018	MM 6	HNS 0606	MF 3
37H 5649§	MR 74	HBN 0514	MS 4	HBN 0714	MF 27			HNS 0606	MF 4
37H 5649§	MR 76	HBN 0516	MR 22	HBN 0714	MJ 5	HCS 116	MR 77	HNS 0606	MF 6
37H 5650§	MR 72·1	HBN 0520	MR 69	HBN 0714	MN 8	HCS 340	MF 11	HNS 0606	MF 13
37H 5650§	MR 73	HBN 0606	MR 32	HBN 0714	MR 1·2	HCS 340	MF 17	HNS 0606	MN 4
37H 5650§	MR 74	HBN 0610	ME 1·1	HBN 0714	MR 2	HCS 340	MS 9	HNS 0606	MR 36
37H 5650§	MR 76	HBN 0610	MF 3	HBN 0714	MR 3	HCS 340	MS 14	HNS 0607	MN 4
37H 5651§	MR 73	HBN 0610	MF 4	HBN 0714	MR 5·1	HCS 342	MR 83	HNS 0607	MR 33
37H 5651§	MR 76	HBN 0610	MF 6	HBN 0714	MR 8·1	HCS 0507	MR 81	HNS 0608	MH 1
37H 5652§	MR 73	HBN 0610	MF 7	HBN 0714	MT 13	HCS 0709	MR 81	HNS 0608	MH 4
37H 5652§	MR 76	HBN 0610	MF 8	HBN 0174	MR 61·1	HCS 0913	MC 5	HNS 0608	MR 6
37H 5653§	MR 73	HBN 0610	MF 12	HBN 0714	MR 65	HCS 1217	MC 5	HNS 0608	MR 10
37H 5653§	MR 76	HBN 0610	MF 13	HBN 0714	MS3	HCS 1622	MC 5	HNS 0608	MR 12
37H 5654§	MR 72·1	HBN 0610	MF 17	HBN 0715	MF 27	HCS 1622	MD 4	HNS 0608	MR 13·1
37H 5654§	MR 75	HBN 0610	MF 33	HBN 0715	MR 65	HCS 1622	MD 5	HNS 0608	MR 13·1
37H 5656§	MR 75	HBN 0610	MR 13·2	HBN 0716	MN 8	HCS 2228	MD 4	HNS 0608	MR 55
37H 5657§	MR 75	HBN 0610	MR 17	HBN 0718	MG 1	HCS 2228	MD 5	HNS 0609	MR 1·2
37H 5658§	MR 75	HBN 0610	MR 18	HBN 0718	MM 2			HNS 0609	MR 2
37H 5659§	MR 77	HBN 0610	MR 19	HBN 0718	MN 3	HNS 0403	MN 6	HNS 0609	MR 6
37H 5660§	MR 72·1	HBN 0610	MR 31·1	HBN 0718	MO 1·1	HNS 0404	MR 3	HNS 0609	MR 8·1
37H 5661§	MR 77	HBN 0610	MR 68	HBN 0718	MR 13·3	HNS 0405	MC 4	HNS 0609	MR 13
37H 5662§	MR 72·1	HBN 0610	MR 83	HBN 0718	MR 23	HNS 0405	MR 56·1	HNS 0609	MR 15
37H 5663	MR 72·1	HBN 0610	MS 5	HBN 0720	MN 8	HNS 0406	MK 7	HNS 0612	MF 25
37H 5743§	MR 75	HBN 0610	MS 9	HBN 0720	MR 81	HNS 0406	ML 4	HNS 0612	MR 64
37H 5744§	MR 75	HBN 0610	MS 10	HBN 0722	MG 1	HNS 0406	MR 57	HNS 0613	MF 25
37H 5745§	MR 75	HBN 0610	MS 14	HBN 0818	MR 23	HNS 0406	MR 77	HNS 0613	MR 59·1
		HBN 0612	MF 22	HBN 0824	MG 4	HNS 0407	ML 4	HNS 0613	MR 60
47H 5122	ML 1	HBN 0612	MF 24	HBN 0824	MH 5	HNS 0407	MR 57	HNS 0613	MR 64
47H 5122	MR 42	HBN 0612	MF 27	HBN 0828	MM 6	HNS 0408	MR 79	HNS 0614	MF 28
47H 5122	MR 51	HBN 0612	MR 1·2	HBN 0910	MF 1·1	HNS 0504	MF 30	HNS 0614	MR 64
47H 5124	MR 41	HBN 0612	MR 2	HBN 0912	MF 3	HNS 0504	MF 32	HNS 0614	MR 66
47H 5125	MR 41	HBN 0612	MR 3	HBN 0912	MR 31·1	HNS 0504	MR 33	HNS 0614	MS 1·1
47H 5126	MR 41	HBN 0613	MR 31·1	HBN 0914	MF 1·1	HNS 0504	MR 67	HNS 0705	MM 2
47H 5126	MR 50	HBN 0614	MS 2	HBN 0914	MF 2	HNS 0505	MA 2	HNS 0707	MN 3
47H 5170§	MR 40·1	HBN 0615	MJ 1	HBN 0914	MR 2	HNS 0505	MC 6	HNS 0707	MR 58· 1
47H 5396	ML 3	HBN 0615	MJ 2	HBN 0914	MR 8·1	HNS 0505	MF 28	HNS 0708	MN 3
47H 5419	MK 3	HBN 0615	MS 5	HBN 0914	MR 13	HNS 0505	MK 6	HNS 0708	MN 4
47H 5419	MK 5	HBN 0615	MS 10	HBN 0914	MR 34	HNS 0505	MR 2	HNS 0708	MN 8
47H 5496	MK 3	HBN 0616	MF 3	HBN 0914	MR 35	HNS 0505	MR 3	HNS 0710	MG 1
47H 5496	MK 5	HBN 0616	MF 4	HBN 0916	MF 2	HNS 0505	MR 4	HNS 0710	MG 4
47H 5499	MK 3	HBN 0616	MF 12	HBN 0916	MJ 5	HNS 0505	MR 7	HNS 0710	MN 3
47H 5499	MK 5	HBN 0616	MF 17	HBN 0918	MF 3	HNS 0505	MR 10	HNS 0710	MR 32
47H 5529	MR 42	HBN 0616	MJ 6	HBN 0918	MF 4	HNS 0505	MR 11	HNS 0710	MR 33
47H 5531	MR 51	HBN 0616	MR 82·1	HBN 0918	MH 5	HNS 0505	MR 56·1	HNS 0710	MR 58·1
47H 5598	ML 3	HBN 0616	MR 83	HBN 0924	MH 2	HNS 0505	MR 57	HNS 0718	MG 4
47H 5598	MR 55	HBN 0616	MS 9	HBN 0924	MH 5	HNS 0505	MR 66	HNS 0806	MR 69
		HBN 0616	MS 14	HBN 0928	MR 13·3	HNS 0505	MR 84	HNS 1008	MR 36
57H 5128	MR 51	HBN 0618	ME 1·1	HBN 0928	MR 24	HNS 0506	MA 2	HNS 1212	MN 5
57H 5206	MK 3	HBN 0618	MF 16	HBN 1016	MM 6	HNS 0506	MH 4	HNS 1216	MR 58·1
57H 5206	MK 5	HBN 0618	MJ 1	HBN 1018	MM 6	HNS 0506	MN 6		
57H 5302	MK 7	HBN 0618	MJ 2	HBN 1020	MM 6	HNS 0506	MR 33	HNZ 0606	MR 48·1
57H 5368	MR 51	HBN 0618	MR 13·2	HBN 1022	MO 1·1	HNS 0506	MR 34	HNZ 0606	MR 55
57H 5445	MK 3	HBN 0618	MR 17	HBN 1024	MM 5	HNS 0506	MR 37		
57H 5445	MK 5	HBN 0618	MR 18	HBN 1024	MM 6	HNS 0506	MR 59·1	HZS 0404	MD 3
		HBN 0618	MR 19	HBN 1218	MH 2	HNS 0506	MR 60	HZS 0404	MR 45
67H 5022§	ML 1	HBN 0618	MR 34	HBN 1218	MH 5	HNS 0506	MR 64	HZS 0404	MR 48
67H 5023§	ML 1	HBN 0618	MS 1·1	HBN 1220	MO 1·1	HNS 0506	MR 78·1	HZS 0404	MR 52
		HBN 0618	MS 12	HBN 1220	MO 2	HNS 0506	MR 84	HZS 0405	MC 1·1
97H 640	MR 33	HBN 0620	MF 10	HBN 1220	MO 3	HNS 0506	MS 1·1	HZS 0505	MD 3
97H 658§	MM 5	HBN 0620	MS 7	HBN 1220	MO 4	HNS 0507	MA 1·1	HZS 0505	MN 1·1

§ Parts peculiar to Tractor only

Part Number Index—*continued*

Part Number	Page	Part Number	Page	Part Number	Page	Part Number	Page	Part Number	Page
HZS 0505	MR 1·2	5L 287	MK 5	LWN 205	MR 37	LWN 206	MS 5	LWN 210	MR 36
HZS 0505	MR 52	5L 289	MK 3	LWN 205	MR 44	LWN 206	MS 7	LWN 210	MR 37
HZS 0506	MD 3	5L 289	MK 5	LWN 205	MR 48	LWN 206	MS 9	LWN 212	MF 1·1
HZS 0508	MR 39·1			LWN 205	MR 56·1	LWN 206	MS 10	LWN 212	MF 29
HZS 0607	MC 5	LBS 0708	MR 56·1	LWN 205	MR 57	LWN 206	MS 12	LWN 212	MH 1
HZS 0608	MC 5	LBS 0908	MS 1·1	LWN 205	MR 61·1	LWN 206	MS 14	LWN 212	MH 2
HZS 0608	MR 37	LBS 1416	MF 1·1	LWN 205	MR 66	LWN 207	MF 2	LWN 212	MH 3
HZS 0609	MR 39·1	LBS 1812	MJ 1	LWN 205	MR 75	LWN 207	MF 3	LWN 212	MH 5
HZS 0610	MR 15	LBS 1812	MJ 6	LWN 205	MR 78·1	LWN 207	MF 4	LWN 212	MM 4
HZS 0612	MF 28	LBS 3212	MS 2	LWN 205	MR 83	LWN 207	MF 5	LWN 212	MM 6
HZS 0612	MR 66			LWN 205	MR 84	LWN 207	MF 20	LWN 212	MN 5
HZS 0612	MR 60	LNN 206	MF 7	LWN 205	MS 1·1	LWN 207	MF 27	LWN 212	MO 1·1
HZS 0812	MR 23	LNN 207	MO 1·1	LWN 205	MS 4	LWN 207	MG 1	LWN 212	MO 2
HZS 1014	MM 4	LNN 210	MO 1·1	LWN 205	MS 5	LWN 207	MG 4	LWN 212	MO 3
		LNN 212	MF 7	LWN 205	MS 8	LWN 207	MH 1	LWN 212	MO 4
ISC 319	MF 12	LNN 212	MM 5	LWN 205	MS 9	LWN 207	MJ 1	LWN 212	MO 5
ISC 319	MF 17	LNN 212	MO 1·1	LWN 205	MS 10	LWN 207	MJ 5	LWN 212	MR 1·2
ICS 319	MR 82·1	LNN 212	MO 3	LWN 205	MS 13	LWN 207	MJ 6	LWN 212	MR 2
ISC 319	MS 9	LNN 212	MR 1·2	LWN 206	MA 1·1	LWN 207	MM 2	LWN 212	MR 3
ISC 319	MS 14	LNN 212	MR 58·1	LWN 206	ME 1·1	LWN 207	MN 3	LWN 212	MR 5·1
ISC 360	MR 33	LNN 212	MR 71	LWN 206	MF 3	LWN 207	MN 4	LWN 212	MR 8·1
ISC 362	MG 3	LNN 212	MS 7	LWN 206	MF 4	LWN 207	MN 8	LWN 212	MR 11
ISC 380	MR 1·2	LNN 412	MM 6	LWN 206	MF 6	LWN 207	MO 1·1	LWN 212	MR 13·1
ISC 380	MR 2	LNN 412	MO 5	LWN 206	MF 7	LWN 207	MR 1·2	LWN 212	MR 13·4
ISC 380	MR 3			LWN 206	MF 8	LWN 207	MR 2	LWN 212	MR 26
ISC 380	MR 6	LNZ 104	MN 6	LWN 206	MF 10	LWN 207	MR 3	LWN 212	MR 29
ISC 380	MR 8·1	LNZ 104	MR 52	LWN 206	MF 12	LWN 207	MR 5·1	LWN 212	MR 30
ISC 380	MR 13	LNZ 205	MK 6	LWN 206	MF 13	LWN 207	MR 8·1	LWN 212	MR 35
ISC 390	MF 10	LNZ 208	MF 33	LWN 206	MF 16	LWN 207	MR 13	LWN 212	MR 52
ISC 390	MF 16	LNZ 208	MR 68	LWN 206	MF 17	LWN 207	MR 13·3	LWN 212	MR 58·1
ISC 390	MS 7	LNZ 214	MR 29	LWN 206	MF 25	LWN 207	MR 23	LWN 212	MR 81
ISC 390	MS 12			LWN 206	MF 28	LWN 207	MR 31·1	LWN 302	MR 45
		LWN 203	MN 5	LWN 206	MF 30	LWN 207	MR 32	LWN 305	MF 18
IK 6343	MR 79	LWN 203	MR 44	LWN 206	MF 32	LWN 207	MR 33	LWN 305	MF 19
		LWN 203	MR 48	LWN 206	MF 33	LWN 207	MR 35	LWN 306	MF 22
2K 1639	ML 4	LWN 204	MD 3	LWN 206	MH 1	LWN 207	MR 36	LWN 306	MF 24
2K 2543	MF 30	LWN 204	MF 2	LWN 206	MH 4	LWN 207	MR 58·1	LWN 306	MF 27
2K 2562	MF 17	LWN 204	MF 18	LWN 206	MJ 1	LWN 207	MR 61·1	LWN 307	MF 22
2K 2562	MR 83	LWN 204	MF 19	LWN 206	MJ 2	LWN 207	MR 63	LWN 307	MF 24
2K 2562	MS 14	LWN 204	MF 29	LWN 206	MJ 3	LWN 207	MR 65	LWN 403	MR 40·1
2K 4012	MR 51	LWN 204	ML 4	LWN 206	MJ 4	LWN 207	MR 81	LWN 403	MR 41
2K 6008	MF 20	LWN 204	MM 4	LWN 206	MJ 5	LWN 208	MF 4	LWN 403	MR 51
2K 6008	MF 22	LWN 204	MN 1·1	LWN 206	MJ 6	LWN 208	MG 4	LWN 404	MN 6
2K 6008	MF 24	LWN 204	MN 6	LWN 206	MJ 7	LWN 208	MH 5	LWN 405	MF 30
2K 6008	MF 27	LWN 204	MN 7	LWN 206	MN 4	LWN 208	MM 6	LWN 405	MR 69
2K 6008	MR 62	LWN 204	MR 3	LWN 206	MR 1·2	LWN 208	MR 1·2	LWN 405	MR 74
2K 6008	MR 63	LWN 204	MR 56·1	LWN 206	MR 2	LWN 208	MR 2	LWN 405	MR 79
2K 6008	MR 65	LWN 204	MR 57	LWN 206	MR 3	LWN 208	MR 3	LWN 408	MR 49
2K 8829	MR 76	LWN 204	MR 73	LWN 206	MR 4	LWN 208	MR 6	LWN 410	MJ 3
		LWN 204	MR 75	LWN 206	MR 6	LWN 208	MR 10		
4K 7623	MN 1·1	LWN 204	MR 77	LWN 206	MR 7	LWN 208	MR 13	LWZ 202	ML 1
		LWN 204	MR 79	LWN 206	MR 8·1	LWN 208	MR 13·2	LWZ 202	ML 3
6K 538	MF 7	LWN 204	MS 13	LWN 206	MR 10	LWN 208	MR 69	LWZ 202	MR 72·1
6K 538	MF 8	LWN 205	MA 1·1	LWN 206	MR 12	LWN 209	MF 1·1	LWZ 202	MR 75
6K 538	MF 10	LWN 205	MA 2	LWN 206	MR 13	LWN 209	MF 2	LWZ 203	MC 4
6K 538	MR 1·2	LWN 205	MC 6	LWN 206	MR 13·1	LWN 209	MF 3	LWZ 203	MK 3
6K 538	MR 2	LWN 205	MD 3	LWN 206	MR 13·2	LWN 209	MF 4	LWZ 203	MK 4
6K 538	MR 3	LWN 205	MD 4	LWN 206	MR 13·4	LWN 209	MH 2	LWZ 203	MK 5
6K 538	MR 6	LWN 205	MD 5	LWN 206	MR 14·1	LWN 209	MH 5	LWZ 203	MK 6
6K 538	MR 8·1	LWN 205	MF 11	LWN 206	MR 15	LWN 209	MJ 4	LWZ 203	MK 7
6K 538	MR 13	LWN 205	MF 14	LWN 206	MR 16	LWN 209	MJ 5	LWZ 203	ML 2
6K 538	MS 5	LWN 205	MF 22	LWN 206	MR 17	LWN 209	MJ 6	LWZ 203	MR 43
6K 777	MF 14	LWN 205	MF 28	LWN 206	MR 18	LWN 209	MJ 7	LWZ 203	MR 45
6K 777	MS 10	LWN 205	MF 30	LWN 206	MR 19	LWN 209	MN 5	LWZ 203	MR 48
		LWN 205	MF 32	LWN 206	MR 24	LWN 209	MR 2	LWZ 203	MR 48·1
8K 1473	MR 76	LWN 205	MH 4	LWN 206	MR 31·1	LWN 209	MR 3	LWZ 203	MR 51
		LWN 205	MJ 1	LWN 206	MR 32	LWN 209	MR 8·1	LWZ 203	MR 52
11K 2054	MR 39·1	LWN 205	MJ 5	LWN 206	MR 33	LWN 209	MR 13	LWZ 203	MR 54
11K 9031	ML 3	LWN 205	MJ 6	LWN 206	MR 34	LWN 209	MR 13·3	LWZ 203	MR 55
11K 9243	MR 53	LWN 205	MK 6	LWN 206	MR 36	LWN 209	MR 24	LWZ 203	MR 81
		LWN 205	MN 5	LWN 206	MR 59·1	LWN 209	MR 31·1	LWZ 204	MA 3
21K 8629	MR 73	LWN 205	MN 6	LWN 206	MR 60	LWN 209	MR 34	LWZ 204	MC 1·1
21K 8629	MR 77	LWN 205	MR 1·2	LWN 206	MR 62	LWN 209	MR 35	LWZ 204	MC 4
		LWN 205	MR 2	LWN 206	MR 63	LWN 209	MR 70	LWZ 204	MK 1·1
51K 1185	MR 33	LWN 205	MR 3	LWN 206	MR 64	LWN 210	MH 1	LWZ 204	MK 7
		LWN 205	MR 4	LWN 206	MR 65	LWN 210	MH 4	LWZ 204	ML 1
53K 1172	MS 12	LWN 205	MR 7	LWN 206	MR 66	LWN 210	MM 1	LWZ 204	ML 4
53K 1711	MN 5·1	LWN 205	MR 8·1	LWN 206	MR 67	LWN 210	MM 4	LWZ 204	MR 26
53K 1723	MN 5·1	LWN 205	MR 10	LWN 206	MR 68	LWN 210	MM 5	LWZ 204	MR 44
53K 2594	MN 5·1	LWN 205	MR 11	LWN 206	MR 70	LWN 210	MM 6	LWZ 204	MR 45
		LWN 205	MR 22	LWN 206	MR 72·1	LWN 210	MO 1·1	LWZ 204	MR 48
5L 286	MK 3	LWN 205	MR 28	LWN 206	MR 83	LWN 210	MR 13·3	LWZ 204	MR 48·1
5L 286	MK 5	LWN 205	MR 33	LWN 206	MS 1·1	LWN 210	MR 24	LWZ 204	MR 52
5L 287	MK 3	LWN 205	MR 34	LWN 206	MS 2	LWN 210	MR 35	LWZ 204	MR 55

§ Parts peculiar to Tractor only

Part Number Index—*continued*

Part Number	Page	Part Number	Page	Part Number	Page	Part Number	Page	Part Number	Page
LWZ 204	MR 85	NT 1134§	MF 17	NT 1747§	MF 15	NT 3072§	MR 31·1	NT 3337§	MR 14·1
LWZ 205	MA 2	NT 1134§	MR 83	NT 1747§	MS 6	NT 3073§	MF 20	NT 3338§	MR 14·1
LWZ 205	MK 1·1	NT 1134§	MS 9	NT 1747§	MS 11	NT 3073§	MF 22	NT 3359§	MR 1·2
LWZ 205	MK 4	NT 1134§	MS 14	NT 1797§	MN 5	NT 3073§	MF 24	NT 3359§	MR 2
LWZ 205	MK 6	NT 1138§	MF 11	NT 1815§	MC 6	NT 3073§	MR 61·1	NT 3359§	MR 3
LWZ 205	MN 1·1	NT 1138§	MF 17	NT 1822§	MC 6	NT 3073§	MR 63	NT 3359§	MR 6
LWZ 205	MN 2	NT 1138§	MR 83	NT 1836§	MN 8	NT 3074§	MF 7	NT 3359§	MR 8·1
LWZ 205	MR 13·2	NT 1138§	MS 9	NT 1897§	MG 1	NT 3075§	MH 1	NT 3359§	MR 13
LWZ 205	MR 17	NT 1138§	MS 14	NT 1907§	MG 1	NT 3075§	MH 4	NT 3360§	MR 1·2
LWZ 205	MR 18	NT 1139§	MF 11	NT 1911§	MH 2	NT 3075§	MR 37	NT 3360§	MR 2
LWZ 205	MR 19	NT 1139§	MR 83	NT 1953§	MN 4	NT 3075§	MS 5	NT 3306§	MR 3
LWZ 205	MR 28	NT 1139§	MS 9	NT 1956§	MD 1	NT 3075§	MS 10	NT 3360§	MR 6
LWZ 205	MR 29	NT 1140§	MF 11	NT 1978§	MN 1·1	NT 3076§	MF 20	NT 3360§	MR 8·1
LWZ 205	MR 52	NT 1140§	MF 17	NT 1991§	ME 1	NT 3077§	MF 18	NT 3360§	MR 13
LWZ 205	MR 59·1	NT 1140§	MR 82·1	NT 1992§	ME 1	NT 3077§	MF 19	NT 3361§	MF 3
LWZ 205	MR 60	NT 1140§	MS 9	NT 1992§	MS 1·1	NT 3077§	MR 59·1	NT 3361§	MF 4
LWZ 205	MR 64	NT 1140§	MS 14	NT 2050§	MJ 3	NT 3077§	MS 8	NT 3361§	MR 1·2
LWZ 205	MR 67	NT 1154§	MF 18	NT 2196§	MH 2	NT 3077§	MS 13	NT 3361§	MR 2
LWZ 205	MR 84	NT 1154§	MR 59·1	NT 2196§	MH 5	NT 3079§	MH 1	NT 3361§	MR 3
LWZ 206	MC 5	NT 1154§	MS 8	NT 2217§	ME 1	NT 3079§	MH 3	NT 3361§	MR 5·1
LWZ 206	MN 4	NT 1167§	MF 20	NT 2218§	ME 1	NT 3079§	MR 37	NT 3361§	MR 8·1
LWZ 206	MR 16	NT 1172§	MF 10	NT 2218§	MS 1·1	NT 3083§	MF 1·1	NT 3370§	MR 5·1
LWZ 206	MR 37	NT 1175§	MF 30	NT 2229§	MN 5	NT 3085§	MJ 3	NT 3370§	MR 8·1
LWZ 206	MR 39·1	NT 1176§	MF 30	NT 2312§	MG 1	NT 3085§	MN 4	NT 3370§	MR 13
LWZ 206	MR 48·1	NT 1181§	MF 10	NT 2312§	MG 4	NT 3086§	MF 30	NT 3371§	MR 14·1
LWZ 206	MR 55	NT 1182§	MF 10	NT 2336§	MJ 5	NT 3086§	MF 32	NT 3372§	MR 1·2
LWZ 207	MR 23	NT 1184§	MF 3	NT 2365§	MN 8	NT 3086§	MR 67	NT 3372§	MR 2
LWZ 209	MR 13·3	NT 1185§	MF 7	NT 2366§	MN 8	NT 3089§	ME 1	NT 3372§	MR 3
LWZ 209	MR 22	NT 1186§	MF 7	NT 2415§	MR 31·1	NT 3093§	MH 2	NT 3372§	MR 6
LWZ 210	MM 6	NT 1187§	MF 18	NT 2455§	MA 2	NT 3093§	MH 5	NT 3372§	MR 8·1
LWZ 212	MR 71	NT 1187§	MF 19	NT 2455§	MC 6	NT 3094§	MH 2	NT 3383§	MR 1·2
LWZ 302	ML 3	NT 1187§	MS 8	NT 2455§	MR 84	NT 3094§	MH 5	NT 3383§	MR 2
LWZ 304	MR 57	NT 1187§	MS 13	NT 2464§	MH 2	NT 3095§	MH 2	NT 3383§	MR 3
LWZ 406	MR 44	NT 1188§	MF 18	NT 2464§	MH 5	NT 3095§	MH 5	NT 3383§	MR 6
LWZ 406	MR 48	NT 1188§	MF 19	NT 3004§	MF 2	NT 3102§	ME 1	NT 3383§	MR 10
LWZ 407	MR 42	NT 1188§	MS 8	NT 3004§	MH 1	NT 3118§	MH 1	NT 3383§	MR 13·1
LWZ 408	ML 1	NT 1188§	MS 13	NT 3004§	MH 2	NT 3118§	MH 3	NT 3384§	MR 17
LWZ 408	ML 4	NT 1189§	MF 18	NT 3004§	MH 3	NT 3124§	MH 1	NT 3384§	MR 18
LWZ 410	MR 40·1	NT 1189§	MF 19	NT 3004§	MH 5	NT 3124§	MH 4	NT 3384§	MR 19
LWZ 410	MR 41	NT 1189§	MS 8	NT 3005§	MH 1	NT 3124§	MR 37	NT 3389§	MR 29
LWZ 506	MR 15	NT 1189§	MS 13	NT 3005§	MH 3	NT 3134§	ME 1	NT 3390§	MR 17
LWZ 604	MR 24	NT 1191§	MF 20	NT 3006§	MR 31·1	NT 3134§	MS 1·1	NT 3390§	MR 18
		NT 1192§	MF 20	NT 3007§	MF 2	NT 3143§	MH 1	NT 3391§	MR 13·2
MPS 0406	MF 28	NT 1193§	MF 20	NT 3007§	MF 10	NT 3143§	MH 4	NT 3391§	MR 17
MPS 0406	MR 66	NT 1205§	MG 1	NT 3007§	MS 7	NT 3143§	MR 36	NT 3391§	MR 18
MPS 2610	MR 84	NT 1206§	MG 1	NT 3017§	MD 1	NT 3143§	MR 37	NT 3391§	MR 19
MPS 3020	MR 36	NT 1226§	MF 2	NT 3018§	MD 1	NT 3144§	MF 2	NT 3394§	MR 13·2
MPS 3021	MR 36	NT 1227§	MF 2	NT 3019§	MF 2	NT 3145§	MF 1·1	NT 3394§	MR 17
		NT 1234§	MG 1	NT 3020§	MF 10	NT 3145§	MF 5	NT 3394§	MR 18
NCS 0506	MR 79	NT 1241§	MG 1	NT 3025§	MR 31·1	NT 3145§	MF 20	NT 3394§	MR 19
		NT 1241§	MG 3	NT 3033§	MJ 3	NT 3162§	MA 2	NT 3395§	MR 17
NT 1054§	MH 3	NT 1247§	MF 1·1	NT 3033§	MJ 4	NT 3162§	MC 6	NT 3396§	MR 13·2
NT 1055§	MH 3	NT 1251§	ME 1	NT 3033§	MJ 5	NT 3162§	MR 84	NT 3396§	MR 17
NT 1064§	MH 1	NT 1315§	MF 3	NT 3033§	MJ 7	NT 3164§	MA 2	NT 3396§	MR 18
NT 1067§	MH 1	NT 1315§	MF 6	NT 3033§	MR 70	NT 3164§	MR 13	NT 3396§	MR 19
NT 1067§	MH 3	NT 1316§	MF 7	NT 3033§	MJ 1·1	NT 3164§	MR 13·2	NT 3398§	MR 13·2
NT 1068§	MH 1	NT 1331§	MF 20	NT 3033§	MS 2	NT 3164§	MR 84	NT 3398§	MR 17
NT 1068§	MH 4	NT 1331§	MF 22	NT 3034§	MJ 3	NT 3183§	MM 1	NT 3398§	MR 18
NT 1068§	MR 37	NT 1331§	MF 24	NT 3035§	MC 6	NT 3214§	MN 1·1	NT 3398§	MR 19
NT 1069§	MH 1	NT 1331§	MR 61·1	NT 3036§	ME 1	NT 3214§	MN 2	NT 3502§	MR 17
NT 1069§	MH 3	NT 1331§	MR 63	NT 3037§	ME 1	NT 3215§	MN 1·1	NT 3517§	MR 13·3
NT 1076§	MH 1	NT 1366§	MN 5	NT 3039§	MR 31·1	NT 3215§	MN 2	NT 3517§	MR 23
NT 1076§	MH 4	NT 1426§	MC 5	NT 3043§	MG 1	NT 3216§	MN 2	NT 3519§	MR 13·3
NT 1076§	MR 37	NT 1568§	ML 2	NT 3043§	MR 14	NT 3220§	MN 1·1	NT 3519§	MR 24
NT 1079§	MH 1	NT 1580§	ML 3	NT 3045§	MH 2	NT 3221§	MN 5	NT 3523§	MR 13·3
NT 1079§	MH 4	NT 1580§	MR 55	NT 3045§	MH 5	NT 3222§	MN 5	NT 3523§	MR 24
NT 1079§	MR 37	NT 1625§	MA 2	NT 3047§	MH 2	NT 3244§	MN 1·1	NT 3524§	MR 23
NT 1102§	MM 3	NT 1625§	MC 6	NT 3050§	MR 31·1	NT 3249§	MN 1·1	NT 2525§	MR 33
NT 1106§	MF 10	NT 1625§	MK 6	NT 3053§	MF 7	NT 3249§	MN 2	NT 3526§	MR 23
NT 1108§	MF 10	NT 1625§	MR 13	NT 3053§	MF 8	NT 3280§	MO 2	NT 3527§	MR 23
NT 1108§	MS 7	NT 1625§	MR 13·2	NT 3053§	MS 5	NT 3280§	MO 3	NT 3528§	MR 23
NT 1113§	MF 9	NT 1625§	MR 84	NT 3057§	MF 9	NT 3280§	MO 4	NT 3529§	MR 23
NT 1113§	MF 15	NT 1678§	MJ 3	NT 3057§	MF 15	NT 3280§	MO 5	NT 3544§	MR 10
NT 1113§	MS 6	NT 1679§	MJ 2	NT 3057§	MS 6	NT 3287§	MJ 3	NT 3544§	MR 13
NT 1113§	MS 11	NT 1682§	MJ 1	NT 3057§	MS 11	NT 3309§	MR 14·1	NT 3544§	MR 13·1
NT 1114§	MF 9	NT 1682§	MJ 6	NT 3059§	MF 9	NT 3311§	MR 1·2	NT 3544§	MR 13·2
NT 1114§	MS 6	NT 1731§	MR 31·1	NT 3059§	MF 15	NT 3311§	MR 2	NT 3558§	MR 3
NT 1119§	MF 9	NT 1733§	MR 31·1	NT 3059§	MS 6	NT 3311§	MR 6	NT 3582§	MF 3
NT 1119§	MF 15	NT 1738§	MR 31·1	NT 3059§	MS 11	NT 3312§	MR 23	NT 3582§	MF 4
NT 1119§	MS 6	NT 1739§	MR 31·1	NT 3061§	MF 20	NT 3331§	MF 10	NT 3590§	MC 6
NT 1119§	MS 11	NT 1740§	MR 31·1	NT 3065§	MF 20	NT 3333§	MR 13·3	NT 3594§	MN 6
NT 1127§	MF 3	NT 1742§	MR 31·1	NT 3067§	MG 1	NT 3333§	MR 23	NT 3614§	MR 28
NT 1127§	MF 6	NT 1746§	MF 10	NT 3067§	MG 3	NT 3334§	MR 23	NT 3614§	MR 28·2
NT 1134§	MF 11	NT 1747§	MF 9	NT 3069§	MF 20	NT 3336§	MR 14·1	NT 3615§	MR 28

§ Parts peculiar to Tractor only

Part Number Index—*continued*

Part Number	Page	Part Number	Page	Part Number	Page	Part Number	Page	Part Number	Page
NT 3615§	MR 28·2	NT 3801§	MR 21	NT 4106§	ME 1·1	NT 4580§	MO 3	NT 4958§	MF 9
NT 3627§	MR 26	NT 3802§	MR 13·3	NT 4110§	MO 4	NT 4588§	MR 34	NT 4958§	MF 15
NT 3630§	MD 4	NT 3802§	MR 20	NT 4110§	MO 5	NT 4594§	MO 2	NT 4958§	MS 6
NT 3637§	MR 27	NT 3803§	MR 13·3	NT 4118§	MR 25·1	NT 4594§	MO 3	NT 4958§	MS 11
NT 3637§	MR 28	NT 3803§	MR 14·1	NT 4119§	MR 13·3	NT 4594§	MO 4	NT 4959§	MF 9
NT 3648§	MR 28	NT 3803§	MR 20	NT 4119§	MR 23	NT 4594§	MO 5	NT 4959§	MF 15
NT 3654§	MR 28	NT 3803§	MR 21	NT 4139§	MO 4	NT 4595§	MO 2	NT 4959§	MS 6
NT 3654§	MR 28·2	NT 3805§	MR 1·2	NT 4143§	MO 4	NT 4595§	MO 3	NT 4959§	MS 11
NT 3657§	MR 27	NT 3805§	MR 2	NT 4171§	MR 34	NT 4595§	MO 4	NT 4960§	MF 9
NT 3657§	MR 28	NT 3805§	MR 3	NT 4172§	MR 34	NT 4595§	MO 5	NT 4960§	MF 15
NT 3657§	MR 28·1	NT 3805§	MR 5·1	NT 4174§	MR 34	NT 4603§	MO 4	NT 4960§	MS 6
NT 3657§	MR 28·2	NT 3805§	MR 8·1	NT 4175§	MR 34	NT 4609§	MR 34	NT 4960§	MS 11
NT 3658§	MR 27	NT 3812§	MN 2	NT 4176§	MR 34	NT 4629§	MM3	NT 4965§	MH 2
NT 3658§	MR 28	NT 3817§	MR 1·2	NT 4177§	MR 34	NT 4641§	MR 25·1	NT 4967§	MH 2
NT 3658§	MR 28·1	NT 3817§	MR 2	NT 4178§	MR 34	NT 4641§	MR 27	NT 4976§	MH1
NT 3658§	MR 28·2	NT 3817§	MR 3	NT 4180§	MR 34	NT 4641§	MR 28	NT 4978§	MH 1
NT 3659§	MR 29	NT 3818§	ML 3	NT 4181§	MR 34	NT 4641§	MR 28·1	NT 4982§	MD 1
NT 3664§	MN 6	NT 3829§	MR 44	NT 4183§	MR 34	NT 4641§	MR 28·2	NT 4900§	MD 1
NT 3666§	MR 40·1	NT 3829§	MR 48	NT 4189§	MR 36	NT 4642§	MR 25·1	NT 4991§	MN 4
NT 3667§	MR 55	NT 3831§	MR 44	NT 4190§	MR 34	NT 4642§	MR 27	NT 4992§	MN 7
NT 3673§	MR 5·1	NT 3831§	MR 48	NT 4191§	MR 34	NT 4642§	MR 28	NT 4993§	MN 7
NT 3674§	MR 5·1	NT 3832§	MR 44	NT 4193§	MR 34	NT 4643§	MF 9	NT 5015§	MG 1
NT 3675§	MR 5·1	NT 3832§	MR 48	NT 4196§	MR 34	NT 4643§	MS 6	NT 5015§	MG 3
NT 3681§	MR 31·1	NT 3833§	MR 44	NT 4197§	MR 34	NT 4668§	MD 1	NT 5024§	MF 12
NT 3682§	MR 31·1	NT 3833§	MR 48	NT 4233§	MR 44	NT 4672§	MR 14·1	NT 5024§	MF 17
NT 3691§	MR 13·3	NT 3834§	MR 45	NT 4234§	MR 44	NT 4683§	MR 32	NT 5024§	MR 82·1
NT 3691§	MR 24	NT 3834§	MR 48	NT 4234§	MR 48	NT 4685§	MR 32	NT 5024§	MS 9
NT 3694§	MR 27	NT 3836§	MR 44	NT 4234§	MR 52	NT 4686§	MR 32	NT 5024§	MS 14
NT 3694§	MR 28	NT 3836§	MR 48	NT 4235§	MR 44	NT 4694§	MF 18	NT 5025§	MF 11
NT 3694§	MR 28·1	NT 3836§	MR 52	NT 4243§	MA 1·1	NT 4694§	MR 59·1	NT 5025§	MF 17
NT 3694§	MR 28·2	NT 3849§	MN 7	NT 4272§	MK 7	NT 4694§	MS 8	NT 5025§	MR 82·1
NT 3697§	MR 26	NT 3853§	MN 6	NT 4292§	MR 13·2	NT 4696§	MF 18	NT 5025§	MS 9
NT 3701§	MR 25·1	NT 3853§	MR 48·1	NT 4292§	MR 17	NT 4696§	MS 8	NT 5025§	MS 14
NT 3721§	MR 25·1	NT 3853§	MR 52	NT 4292§	MR 18	NT 4698	MR 34	NT 5046§	MD 4
NT 3728§	MR 1·2	NT 3862§	MR 17	NT 4292§	MR 19	NT 4699§	MR 34	NT 5080§	MA 1·1
NT 3728§	MR 4	NT 3862§	MR 18	NT 4302§	MD 2	NT 4714§	MR 29	NT 5126§	MG 1
NT 3728§	MR 7	NT 3862§	MR 19	NT 4333§	MA 2	NT 4716§	MR 34	NT 5126§	MH 2
NT 3732§	MR 22	NT 3863§	MR 17	NT 4333§	MR 84	NT 4717§	MR 34	NT 5129§	MR 28
NT 3733§	MR 1·2	NT 3863§	MR 18	NT 4348§	MR 29	NT 4729§	MR 32	NT 5144§	MF 18
NT 3733§	MR 2	NT 3863§	MR 19	NT 4358§	MR 48	NT 4730§	MM 1	NT 5144§	MF 19
NT 3733§	MR 3	NT 3881§	MR 29	NT 4358§	MR 48·1	NT 4731§	MM 1	NT 5144§	MR 59
NT 3733§	MR 6	NT 3883§	MR 29	NT 4365§	MH 2	NT 4737§	MR 35	NT 5144§	MS 8
NT 3733§	MR 10	NT 3890§	MR 40·1	NT 4368§	MH 1	NT 4760§	ML 1	NT 5144§	MS 13
NT 3733§	MR 13·1	NT 3899§	MN 6	NT 4368§	MH 2	NT 4760§	MR 44	NT 5145§	MF 18
NT 3733§	MR 13·2	NT 3900§	MR 45	NT 4370§	MH 1	NT 4833§	MO 2	NT 5145§	MF 19
NT 3733§	MR 22	NT 3900§	MR 48	NT 4371§	MH 1	NT 4852§	MF 1·1	NT 5145§	MR 59·1
NT 3733§	MR 34	NT 3903§	MR 29	NT 4371§	MH 4	NT 4854§	MH 2	NT 5145§	MS 8
NT 3734§	MR 13·3	NT 3908§	MR 14·1	NT 4371§	MR 37	NT 4854§	MH 5	NT 5145§	MS 13
NT 3734§	MR 22	NT 3915§	MR 45	NT 4372§	MR 13·2	NT 4861§	MH 2	NT 5155§	MF 18
NT 3770§	MR 13·3	NT 3922§	MR 29	NT 4372§	MR 17	NT 4862§	MH 2	NT 5155§	MR 59·1
NT 3770§	MR 22	NT 3924§	MR 45	NT 4372§	MR 18	NT 4862§	MH 5	NT 5155§	MS 8
NT 3770§	MR 34	NT 3930§	MR 5·1	NT 4372§	MR 19	NT 4865§	MH 2	NT 5163§	MR 35
NT 3770§	MS 1·1	NT 3930§	MR 8·1	NT 4375§	MH 2	NT 4865§	MH 5	NT 5170§	MF 7
NT 3771§	MR 13·3	NT 3930§	MR 13	NT 4429§	MR 13·2	NT 4866§	MH 2	NT 5175§	MF 12
NT 3771§	MR 22	NT 3934§	MR 5·1	NT 4429§	MR 17	NT 4866§	MH 5	NT 5175§	MF 17
NT 3780§	MR 17	NT 3934§	MR 8·1	NT 4429§	MR 18	NT 4871§	MH 1	NT 5175§	MR 82·1
NT 3781§	MR 1·2	NT 3934§	MR 13	NT 4429§	MR 19	NT 4872§	MH 1	NT 5175§	MS 9
NT 3781§	MR 2	NT 3941§	MR 29	NT 4453§	MR 13·3	NT 4873§	MH 2	NT 5175§	MS 14
NT 3781§	MR 4	NT 3943§	MR 48	NT 4453§	MR 22	NT 4874	MH 1	NT 5198§	MF 7
NT 3781§	MR 7	NT 3943§	MR 48·1	NT 4454§	MR 13·3	NT 4874§	MH 4	NT 5201§	MF 11
NT 3781§	MR 13·1	NT 3943§	MR 53	NT 4454§	MR 22	NT 4874§	MR 37	NT 5201§	MF 17
NT 3781§	MR 10	NT 3947§	MR 1·2	NT 4477§	MR 26	NT 4876§	MH 1	NT 5201§	MR 82·1
NT 3790§	MR 20	NT 3947§	MR 5·1	NT 4490§	MM 4	NT 4876§	MH 4	NT 5201§	MS 9
NT 3793§	MR 13·3	NT 4005§	MM 5	NT 4499§	MM 4	NT 4876§	MR 37	NT 5201§	MS 14
NT 3793§	MR 20	NT 4008§	ME 1	NT 4502§	MA 2	NT 4883§	MJ 4	NT 5202§	MF 11
NT 3793§	MR 21	NT 4008§	MR 34	NT 4517§	MR 1·2	NT 4884§	MJ 4	NT 5202§	MF 17
NT 3794§	MR 13·3	NT 4010§	MR 31·1	NT 4517§	MR 6	NT 4886§	MJ 4	NT 5202§	MR 82·1
NT 3794§	MR 20	NT 4011§	MF 9	NT 4523§	MR 13·2	NT 4887§	MJ 4	NT 5202§	MS 9
NT 3794§	MR 21	NT 4011§	MS 6	NT 4523§	MR 14·1	NT 4891§	MJ 4	NT 5202§	MS 14
NT 3795§	MR 13·3	NT 4013§	MF 9	NT 4523§	MR 15	NT 4899§	MR 13·2	NT 5203§	MA 2
NT 3795§	MR 14·1	NT 4013§	MS 6	NT 4523§	MR 16	NT 4899§	MR 17	NT 5206§	MN 6
NT 3795§	MR 20	NT 4016§	MF 10	NT 4524§	MR 5·1	NT 4899§	MR 18	NT 5262§	MM 3
NT 3795§	MR 21	NT 4017§	MF 20	NT 4524§	MR 8·1	NT 4899§	MR 19	NT 5287§	MR 1·2
NT 3796§	MR 13·2	NT 4017§	MF 22	NT 4524§	MR 13	NT 4921§	MR 14·1	NT 5287§	MR 2
NT 3796§	MR 14·1	NT 4017§	MF 24	NT 4530§	MR 5·1	NT 4952§	MF 3	NT 5287§	MR 3
NT 3796§	MR 20	NT 4017§	MF 27·1	NT 4530§	MR 8·1	NT 4952§	MF 6	NT 5287§	MR 6
NT 3796§	MR 21	NT 4017§	MR 61·1	NT 4530§	MR 13	NT 4952§	MS 5	NT 5287§	MR 9
NT 3797§	MR 13·3	NT 4017§	MR 63	NT 4555§	MR 35	NT 4953§	MF 10	NT 5288§	MR 1·2
NT 3797§	MR 14·1	NT 4017§	MR 65	NT 4556§	MR 35	NT 4955§	MF 10	NT 5288§	MR 2
NT 3797§	MR 20	NT 4072§	MF 3	NT 3557§	MR 35	NT 4955§	MS 7	NT 5288§	MR 3
N1 3797§	MR 21	NT 4072§	MR 31·1	NT 4558§	MR 35	NT 4957§	MF 9	NT 5288§	MR 6
NT 3799§	MR 20	NT 4073§	MF 5	NT 4579§	MO 2	NT 4957§	MF 15	NT 5288§	MR 10
NT 3801§	MR 13·3	NT 4079§	MR 35	NT 4579§	MO 3	NT 4957§	MS 6	NT 5288§	MR 13·1
NT 3801§	MR 20	NT 4082§	MR 35	NT 4580§	MO 2	NT 4957§	MS 11	NT 5292§	MF 12

§ Parts peculiar to Tractor only

Part Number Index—*continued*

Part Number	Page	Part Number	Page	Part Number	Page	Part Number	Page	Part Number	Page
NT 5292§	MF 17	NT 5595§	MN 3	NT 5742§	MR 27	NT 5855§	MC 5	NT 6054§	MR 6
NT 5292§	MR 83	NT 5596§	MJ 3	NT 5744§	MR 29	NT 5856§	MC 5	NT 6059§	MR 1·2
TN 5292§	MS 9	NT 5598§	MJ 3	NT 5745§	MR 29	NT 5862§	MM 5	NT 6059§	MR 6
NT 5292§	MS 14	NT 5599§	MJ 1	NT 5746§	MR 29	NT 5863§	MF 20	NT 6066§	MR 31·1
NT 5302§	MA 1·1	NT 5599§	MJ 2	NT 5747§	MR 29	NT 5868§	MM 1	NT 6069§	MR 31·1
NT 5304§	MF 20	NT 5600§	MJ 1	NT 5751§	MF 7	NT 5871§	MM 1	NT 6076§	MR 29
NT 5305§	MF 30	NT 5601§	MJ 1	NT 5752§	MR 25·1	NT 5873§	MM 3	NT 6077§	MR 29
NT 5319§	MF 2	NT 5602§	MJ 1	NT 5755§	MF 1·1	NT 5875§	MR 31·1	NT 6080§	MF 5
NT 5341§	MR 36	NT 5607§	MF 2	NT 5756§	MF 1·1	NT 5877§	MR 31·1	NT 6080§	MF 20
NT 5353§	MR 36	NT 5610§	ME 1	NT 5757§	MN 6	NT 5879§	MN 1·1	NT 6084§	MR 36
NT 5357§	MR 36	NT 5611§	ME 1	NT 5757§	MR 48·1	NT 5885§	MC 5	NT 6085§	MR 36
NT 5358§	MR 36	NT 5622§	MF 2	NT 5757§	MR 52	NT 5888§	MM 1	NT 6086§	MR 36
NT 5361§	MC 5	NT 5623§	MG 1	NT 5778§	MF 6	NT 5914§	MF 18	NT 6088§	MR 14·1
NT 5362§	MC 5	NT 5623§	MG 3	NT 5783§	MM 5	NT 5914§	MS 8	NT 6090§	MR 14·1
NT 5367§	MF 7	NT 5624§	MG 1	NT 5788§	MM 1	NT 5915§	MF 18	NT 6093§	MR 31·1
NT 5370§	MR 36	NT 5626§	MG 1	NT 5790§	MF 7	NT 5915§	MS 8	NT 6096§	MR 12
NT 5378§	MN 5	NT 5627§	MG 1	NT 5792§	MF 11	NT 5917§	MF 18	NT 6096§	MR 17
NT 5393§	MR 36	NT 5628§	MG 1	NT 5792§	MS 9	NT 5917§	MF 19	NT 6096§	MR 82·1
NT 5394§	MR 36	NT 5629§	MG 1	NT 5796§	MF 11	NT 5917§	MR 59·1	NT 6096§	MS 9
NT 5395§	MR 36	NT 5632§	MF 2	NT 5796§	MF 17	NT 5917§	MS 8	NT 6096§	MS 14
NT 5396§	MR 36	NT 5635§	MH 2	NT 5796§	MR 83	NT 5917§	MS 13	NT 6102§	MF 12
NT 5397§	MR 36	NT 5635§	MH 5	NT 5796§	MS 9	NT 5920§	MF 18	NT 6102§	MF 17
NT 5398§	MR 36	NT 5639§	MA 1·1	NT 5796§	MS 14	NT 5920§	MS 8	NT 6102§	MR 82·1
NT 5399§	ML 3	NT 5639§	MD 5	NT 5797§	MF 12	NT 5922§	MF 18	NT 6102§	MS 9
NT 5420§	MF 9	NT 5642§	MN 4	NT 5797§	MF 17	NT 5922§	MS 8	NT 6102§	MS 14
NT 5420§	MS 6	NT 5645§	MR 31·1	NT 5797§	MR 82·1	NT 5925§	MH 2	NT 6103§	MF 12
NT 5421§	MF 9	NT 5650§	MR 31·1	NT 5797§	MS 9	NT 5925§	MH 5	NT 6103§	MF 17
NT 5421§	MS 6	NT 5666§	MO 1·1	NT 5797§	MS 14	NT 5926§	MA 2	NT 6103§	MR 82·1
NT 5422§	MF 9	NT 5666§	MO 3	NT 5798§	MF 12	NT 5943§	MR 13·3	NT 6103§	MS 9
NT 5422§	MS 6	NT 5666§	MO 4	NT 5798§	MF 14	NT 5943§	MR 23	NT 6103§	MS 14
NT 5423§	MF 9	NT 5673§	MC 6	NT 5798§	MF 17	NT 5955§	MJ 1	NT 6104§	MF 12
NT 5423§	MS 6	NT 5679§	MA 2	NT 5798§	MR 59·1	NT 5955§	MJ 2	NT 6104§	MF 17
NT 5424§	MF 9	NT 5679§	MR 84	NT 5798§	MR 82·1	NT 5955§	MJ 6	NT 6104§	MR 82·1
NT 5424§	MS 6	NT 5680§	MA 2	NT 5798§	MS 1·1	NT 5955§	MR 34	NT 6104§	MS 9
NT 5429§	MD 1	NT 5680§	MR 13	NT 5798§	MS 9	NT 5955§	MS 1·1	NT 6104§	MS 14
NT 5453§	MF 18	NT 5680§	MR 13·2	NT 5798§	MS 10	NT 5955§	MS 2	NT 6105§	MF 12
NT 5453§	MF 19	NT 5680§	MR 84	NT 5798§	MS 14	NT 5957§	MJ 1	NT 6105§	MF 17
NT 5453§	MS 8	NT 5681§	MA 2	NT 5804§	MF 11	NT 5960§	MD 4	NT 6105§	MR 82·1
NT 5453§	MS 13	NT 5681§	MR 84	NT 5804§	MF 17	NT 5963§	MJ 1	NT 6105§	MS 9
NT 5470§	MH 1	NT 5683§	MA 2	NT 5804§	MR 83	NT 5964§	MJ 1	NT 6105§	MS 14
NT 5470§	MH 4	NT 5685§	MR 34	NT 5804§	MS 9	NT 5966§	MJ 1	NT 6110§	MH 2
NT 5470§	MR 37	NT 5686§	MR 34	NT 5804§	MS 14	NT 5970§	MF 20	NT 6113§	MF 20
NT 5475§	MO 2	NT 5687§	MR 34	NT 5806§	MF 11	NT 5987§	MR 31·1	NT 6114§	MF 12
NT 5477§	MG 4	NT 5688§	MR 34	NT 5806§	MR 83	NT 5994§	MF 12	NT 6114§	MF 17
NT 5522§	MR 35	NT 5689§	MR 34	NT 5806§	MS 9	NT 5994§	MF 17	NT 6114§	MS 9
NT 5544§	MJ 4	NT 5694§	MR 1·2	NT 5811§	MR 31·1	NT 5994§	MR 82·1	NT 6114§	MS 14
NT 5545§	MJ 3	NT 5694§	MR 6	NT 5812§	MF 18	NT 5994§	MS 9	NT 6115§	MR 31·1
NT 5545§	MJ 4	NT 5697§	MR 1·2	NT 5812§	MF 19	NT 5994§	MS 14	NT 6117§	MF 7
NT 5545§	MJ 5	NT 5697§	MR 6	NT 5812§	MS 8	NT 5995§	MF 12	NT 6121§	MN 5
NT 5545§	MJ 6	NT 5703§	MR 14·1	NT 5812§	MS 13	NT 5995§	MF 17	NT 6126§	MO 1·1
NT 5545§	MJ 7	NT 5705§	MR 14·1	NT 5813§	MR 31·1	NT 5995§	MR 82·1	NT 6128§	MR 1·2
NT 5545§	MR 35	NT 5706§	MR 14·1	NT 5814§	MF 9	NT 5995§	MS 9	NT 6128§	MR 2
NT 5545§	MR 70	NT 5707§	MR 14·1	NT 5814§	MF 18	NT 5995§	MS 14	NT 6128§	MR 3
NT 5545§	MS 1·1	NT 5708§	MR 13·2	NT 5814§	MS 6	NT 6004§	MF 12	NT 6128§	MR 5·1
NT 5545§	MS 2	NT 5708§	MR 14·1	NT 5814§	MS 8	NT 6004§	MF 17	NT 6128§	MR 8·1
NT 5546§	MJ 4	NT 5708§	MR 15	NT 5815§	MF 20	NT 6004§	MR 82·1	NT 6130§	MR 35
NT 5548§	MF 3	NT 5708§	MR 16	NT 5816§	MF 20	NT 6004§	MS 9	NT 6132§	MR 35
NT 5548§	MF 4	NT 5712§	MR 13·3	NT 5820§	MF 20	NT 6004§	MS 14	NT 6135§	MR 35
NT 5548§	MJ 4	NT 5712§	MR 22	NT 5822§	MF 20	NT 6005§	MF 12	NT 6136§	MF 7
NT 5548§	MJ 5	NT 5714§	MR 13·3	NT 5824§	MF 29	NT 6005§	MF 17	NT 6136§	MF 8
NT 5548§	MJ 7	NT 5714§	MR 22	NT 5826§	MF 29	NT 6005§	MR 82·1	NT 6136§	MS 5
NT 5548§	MR 70	NT 5719§	MR 23	NT 5827§	MF 29	NT 6005§	MS 9	NT 6137§	MR 31·1
NT 5552§	MR 44	NT 5720§	MR 23	NT 5828§	MF 29	NT 6005§	MS 14	NT 6138§	MR 31·1
NT 5552§	MR 48	NT 5721§	MR 13·3	NT 5829§	MF 29	NT 6006§	MF 12	NT 6142§	MR 31·1
NT 5556§	MJ 4	NT 5721§	MR 24	NT 5829§	MM 4	NT 6006§	MF 17	NT 6144§	MJ 1
NT 5572§	MF 3	NT 5722§	MR 13·3	NT 5837§	ML 1	NT 6006§	MR 82·1	NT 6145§	MJ 1
NT 5574§	MN 6	NT 5722§	MR 23	NT 5837§	MR 48·1	NT 6006§	MS 9	NT 6152§	MR 35
NT 5575§	MR 35	NT 5723§	MR 13·4	NT 5839§	MN 3	NT 6006§	MS 14	NT 6155§	MM 6
NT 5581§	MO 1·1	NT 5723§	MR 23	NT 5846§	MF 18	NT 6009§	MF 20	NT 6213§	MD 3
NT 5582§	MO 1·1	NT 5723§	MR 24	NT 5846§	MF 19	NT 6014§	MR 36	NT 6243§	MD 2
NT 5582§	MO 3	NT 5726§	MR 23	NT 5846§	MS 8	NT 6016§	MR 36	NT 6249§	MC 5
NT 5582§	MO 4	NT 5729§	MR 25·1	NT 5846§	MS 13	NT 6017§	MR 37	NT 6251§	MC 5
NT 5582§	MO 5	NT 5730§	MR 25·1	NT 5847§	MF 5	NT 6020§	MR 36	NT 6251§	MD 4
NT 5583§	MO 1·1	NT 5732§	MR 25·1	NT 5847§	MF 12	NT 6021§	MR 36	NT 6251§	MD 5
NT 5583§	MO 2	NT 5733§	MR 25·1	NT 5847§	MF 17	NT 6024§	MD 3	NT 6280§	MF 1·1
NT 5583§	MO 3	NT 5736§	MR 13·4	NT 5847§	MF 20	NT 6025§	MR 32	NT 6281§	MF 1·1
NT 5583§	MO 4	NT 5736§	MR 28	NT 5847§	MR 36	NT 6029§	MG 1	NT 6296§	MH 2
NT 5583§	MO 5	NT 5737§	MR 13·4	NT 5847§	MR 83	NT 6029§	MH 2	NT 6296§	MH 5
NT 5584§	MO 2	NT 5737§	MR 27	NT 5847§	MS 9	NT 6029§	MR 36	NT 6323§	MR 45
NT 5584§	MO 3	NT 5738§	MR 28	NT 5847§	MS 14	NT 6038§	MF 3	NT 6364§	MO 1·1
NT 5584§	MO 4	NT 5739§	MR 28	NT 5848§	MH 1	NT 6038§	MF 11	NT 6365§	MO 1·1
NT 5584§	MO 5	NT 5740§	MR 28	NT 5848§	MH 4	NT 6038§	MS 9	NT 6366§	MO 1·1
NT 5586§	MJ 3	NT 5741§	MR 27	NT 5848§	MR 37	NT 6041§	MO 1·1	NT 6394§	MN 1·1
NT 5594§	MN 3	NT 5741§	MR 28	NT 5850§	MR 28	NT 6054§	MR 1·2	NT 6403§	MR 1·2

Parts peculiar to Tractor only

Part Number Index—*continued*

Part Number	Page	Part Number	Page	Part Number	Page	Part Number	Page	Part Number	Page
NT 6403§	MR 4	NT 6687§	MS 5	NT 6788§	MS 10	NT 7036§	MR 16	NT 7182§	MF 27
NT 6403§	MR 7	NT 6687§	MS 10	NT 6789§	MS 5	NT 7037§	MR 13·2	NT 7183§	MF 22
NT 6404§	MR 1·2	NT 6688§	MS 5	NT 6812§	MS 1·1	NT 7037§	MR 14·1	NT 7183§	MF 24
NT 6404§	MR 2	NT 6688§	MS 10	NT 6817§	MS 2	NT 7037§	MR 15	NT 7183§	MF 27
NT 6404§	MR 3	NT 6689§	MN 4	NT 6820§	MS 1·1	NT 7037§	MR 16	NT 7183§	MR 62
NT 6404§	MR 4	NT 6690§	MD 4	NT 6821§	MS 2	NT 7038§	MR 17	NT 7183§	MR 63
NT 6404§	MR 7	NT 6692§	MN 4	NT 6824§	MS 1·1	NT 7039§	MR 17	NT 7183§	MR 65
NT 6404§	MR 11	NT 6695§	MF 1·1	NT 6835§	MR 1·2	NT 7047§	MK 6	NT 7184§	MF 21
NT 6404§	MR 13·1	NT 6697§	MA 3	NT 6835§	MR 2	NT 7054§	ML 3	NT 7184§	MF 24
NT 6406§	MR 1·2	NT 6697§	MR 85	NT 6835§	MR 5·1	NT 7054§	ML 4	NT 7184§	MF 27
NT 6406§	MR 4	NT 6700§	MA 3	NT 6835§	MR 8·1	NT 7056§	MF 21	NT 7202§	MF 21
NT 6406§	MR 7	NT 6700§	MR 85	NT 6835§	MR 13	NT 7065§	MN 1·1	NT 7202§	MF 24
NT 6407§	MR 1·2	NT 6704§	MA 3	NT 6838§	MR 1·2	NT 7066§	MH 5	NT 7202§	MF 27
NT 6407§	MR 4	NT 6704§	MR 85	NT 6838§	MR 6	NT 7067§	MH 5	NT 7202§	MR 62
NT 6407§	MR 7	NT 6707§	MC 4	NT 6839§	MR 1·2	NT 7068§	MG 1	NT 7202§	MR 63
NT 6417§	MR 22	NT 6712§	MF 1·1	NT 6839§	MR 6	NT 7070§	MA 1	NT 7202§	MR 65
NT 6428§	MM 1	NT 6716§	ME 1	NT 6841§	MR 1·2	NT 7072§	MR 46	NT 7207§	MH 4
NT 6428§	MM 4	NT 6719§	ME 1	NT 6841§	MR 6	NT 7072§	MR 48·1	NT 7207§	MR 37
NT 6433§	ML 3	NT 6721§	MC 5	NT 6843§	MR 1·2	NT 7073§	MR 46	NT 7209§	MH 4
NT 6434§	ML 3	NT 6722§	MC 5	NT 6843§	MR 6	NT 7075§	MR 46	NT 7209§	MR 37
NT 6445§	MD 4	NT 6723§	MF 10	NT 6846§	MP 1	NT 7075§	MR 48·1	NT 7212§	MJ 3
NT 6450§	MR 40·1	NT 6723§	MS 7	NT 6851§	MR 1·2	NT 7076§	MR 46	NT 7219§	MM 1
NT 6451§	ML 3	NT 6724§	MF 10	NT 6851§	MR 2	NT 7076§	MR 48·1	NT 7219§	MM 4
NT 6451§	MR 55	NT 6724§	MF 16	NT 6851§	MR 3	NT 7077§	MR 46	NT 7221§	MM 1
NT 6455§	MR 46	NT 6724§	MS 7	NT 6851§	MR 6	NT 7077§	MR 47	NT 7221§	MM 4
NT 6455§	MR 47	NT 6724§	MS 12	NT 6851§	MR 10	NT 7077§	MR 48·1	NT 7223§	MM 1
NT 6455§	MR 48·1	NT 6725§	MF 10	NT 6851§	MR 13·1	NT 7078§	MR 46	NT 7223§	MM 4
NT 6457§	MR 46	NT 6725§	MF 16	NT 6854§	MR 1·2	NT 7078§	MR 47	NT 7224§	MM 1
NT 6458§	MR 46	NT 6725§	MS 7	NT 6854§	MR 6	NT 7079§	MR 46	NT 7224§	MM 4
NT 6458§	MR 48·1	NT 6725§	MS 12	NT 6878§	MS 7	NT 7079§	MR 47	NT 7244§	MF 21
NT 6464§	MD 4	NT 6726§	ML 3	NT 6880§	MS 7	NT 7079§	MR 48·1	NT 7244§	MR 62
NT 6491§	MD 4	NT 6727§	ML 3	NT 6894§	MD 4	NT 7083§	MJ 5	NT 7246§	MF 21
NT 6491§	MD 5	NT 6732§	MD 4	NT 6894§	MD 5	NT 7083§	MJ 7	NT 7249§	MR 26
NT 6497§	MF 20	NT 6732§	MD 5	NT 6895§	MR 5·1	NT 7083§	MR 70	NT 7251§	MR 26
NT 6502§	MC 6	NT 6735§	MD 5	NT 6898§	MD 4	NT 7085§	MR 31·1	NT 7259§	MR 45
NT 6509§	MR 13·3	NT 6737§	MS 7	NT 6923§	MF 6	NT 7086§	MJ 5	NT 7259§	MR 48
NT 6509§	MR 22	NT 6738§	MF 3	NT 6939§	ML 1	NT 7090§	MA 3	NT 7260§	MR 45
NT 6530§	MN 4	NT 6738§	MF 4	NT 6945§	MC 2	NT 7090§	MA 4	NT 7260§	MR 48
NT 6540§	MG 1	NT 6738§	MF 6	NT 6950§	MC 6	NT 7090§	MR 85	NT 7261§	MR 13·2
NT 6541§	MG 1	NT 6738§	MF 13	NT 6951§	MC 6	NT 7091§	MA 3	NT 7261§	MR 14·1
NT 6541§	MG 4	NT 6739§	MF 3	NT 6952§	MH 6	NT 7091§	MR 85	NT 7261§	MR 17
NT 6542§	MF 12	NT 6739§	MF 4	NT 6952§	MR 38	NT 7095§	MK 6	NT 7261§	MR 18
NT 6542§	MS 9	NT 6739§	MF 6	NT 6953§	MH 6	NT 7097§	MN 1·1	NT 7261§	MR 19
NT 6543§	MG 1	NT 6739§	MF 13	NT 6953§	MR 38	NT 7098§	MN 1·1	NT 7262§	MR 43
NT 6589§	MH 5	NT 6741§	MF 8	NT 6956§	MD 2	NT 7101§	MH 5	NT 7263§	MR 46
NT 6591§	MN 4	NT 6741§	MS 5	NT 6958§	MD 2	NT 7103§	MR 20	NT 7263§	MR 47
NT 6592§	MH 6	NT 6743§	MF 8	NT 6961§	MC 5	NT 7105§	MR 14·1	NT 7263§	MR 48·1
NT 6601§	MA 3	NT 6745§	ME 1	NT 6967§	MC 5	NT 7105§	MR 15	NT 7264§	MR 46
NT 6601§	MA 4	NT 6746§	MA 3	NT 6974§	MJ 3	NT 7108§	MR 13·2	NT 7264§	MR 47
NT 6601§	MR 85	NT 6746§	MR 85	NT 6975§	MJ 3	NT 7108§	MR 14·1	NT 7264§	MR 48·1
NT 6602§	MA 3	NT 6747§	MK 1·1	NT 6976§	MA 3	NT 7108§	MR 15	NT 7273§	MR 13·4
NT 6602§	MA 4	NT 6749§	MG 4	NT 6976§	MR 85	NT 7108§	MR 16	NT 7273§	MR 29
NT 6602§	MR 85	NT 6750§	MF 8	NT 6981§	MK 2	NT 7114§	MH 3	NT 7278§	MS 2
NT 6625§	MF 32	NR 6750§	MS 5	NT 6982§	MK 2	NT 7115§	MH 1	NT 7278§	MS 3
NT 6625§	MR 67	NT 6751§	MF 1·1	NT 6982§	MK 4	NT 7115§	MH 3	NT 7283§	MS 1·1
NT 6634§	MF 30	NT 6753§	MF 2	NT 6983§	MK 1·1	NT 7117§	MR 15	NT 7287§	MS 2
NT 6634§	MF 32	NT 6754§	MF 2	NT 6984§	MK 1·1	NT 7119§	MH 6	NT 7290§	MN 1·1
NT 6634§	MR 67	NT 6755§	MF 2	NT 6985§	MK 1·1	NT 7120§	MH 6	NT 7291§	MN 1·1
NT 6635§	MS 5	NT 6756§	MF 2	NT 6986§	MK 1·1	NT 7124§	MR 46	NT 7297§	MS 1·1
NT 6636§	MS 5	NT 6759§	MG 2	NT 6988§	MK 1·1	NT 7137§	MR 38	NT 7298§	MS 1·1
NT 6636§	MS 10	NT 6760§	MG 2	NT 6990§	MF 1·1	NT 7138§	MR 38	NT 7299§	MS 1·1
NT 6644§	MJ 4	NT 6764§	MN 7	NT 6993§	MK 1·1	NT 7146§	MR 1·2	NT 7300§	MS 2
NT 6644§	MJ 7	NT 6765§	MN 7	NT 6994§	MK 1·1	NT 7148§	MR 48	NT 7301§	MR 34
NT 6644§	MR 70	NT 6771§	MF 10	NT 6995§	MK 1·1	NT 7148§	MR 48·1	NT 7305§	MS 1·1
NT 6646§	MF 31	NT 6771§	MS 7	NT 7003§	ML 1	NT 7149§	MO 2	NT 7307§	MF 5
NT 6647§	MF 31	NT 6772§	MF 10	NT 7007§	MR 56·1	NT 7149§	MO 3	NT 7307§	MF 20
NT 6661§	MR 1·2	NT 6772§	MS 7	NT 7009§	MR 56·1	NT 7162§	MF 22	NT 7308§	MF 20
NT 6661§	MR 2	NT 6773§	MF 10	NT 7010§	MR 56·1	NT 7175§	MJ 1	NT 7309§	MF 20
NT 6661§	MR 3	NT 6773§	MS 7	NT 7011§	MR 56·1	NT 7176§	MJ 2	NT 7309§	MF 22
NT 6661§	MR 6	NT 6774§	MF 10	NT 7012§	MR 56·1	NT 7177§	MF 20	NT 7309§	MF 24
NT 6661§	MR 9	NT 6774§	MF 16	NT 7013§	MR 56·1	NT 7177§	MF 22	NT 7309§	MR 61·1
NT 6663§	MF 7	NT 6774§	MS 7	NT 7013§	MR 57	NT 7177§	MF 24	NT 7309§	MR 63
NT 6663§	MF 8	NT 6774§	MS 12	NT 7028§	MR 13·3	NT 7177§	MR 61·1	NT 7316§	MF 29
NT 6663§	MS 5	NT 6775§	MF 10	NT 7028§	MR 14·1	NT 7177§	MR 63	NT 7332§	MH 2
NT 6664§	MS 5	NT 6775§	MS 7	NT 7028§	MR 20	NT 7179§	MF 5	NT 7338§	MO 1·1
NT 6665§	MF 7	NT 6777§	MS 1·1	NT 7028§	MR 21	NT 7179§	MF 21	NT 7347§	MK 6
NT 6665§	MF 8	NT 6778§	MS 1·1	NT 7034§	MR 15	NT 7179§	MF 24	NT 7348§	MR 41
NT 6665§	MS 5	NT 6779§	MS 1·1	NT 7035§	MR 13·2	NT 7179§	MR 61·1	NT 7350§	MF 21
NT 6666§	MF 7	NT 6780§	MS 1·1	NT 7035§	MR 14·1	NT 7179§	MR 63	NT 7351§	MF 29
NT 6666§	MF 8	NT 6781§	MS 7	NT 7035§	MR 15	NT 7181§	MF 20	NT 7354§	MF 29
NT 6666§	MS 5	NT 6782§	MS 4	NT 7035§	MR 16	NT 7181§	MF 22	NT 7354§	MM 4
NT 6673§	MM 5	NT 6784§	MS 1·1	NT 7036§	MR 13·2	NT 7181§	MR 61·1	NT 7356§	MR 13·2
NT 6673§	MM 6	NT 6787§	MS 4	NT 7036§	MR 14·1	NT 7182§	MF 22	NT 7356§	MR 14·1
NT 6674§	MR 31·1	NT 6788§	MS 5	NT 7036§	MR 15	NT 7182§	MF 24	NT 7356§	MR 17

§ Parts peculiar to Tractor only

Part Number Index—*continued*

Part Number	Page	Part Number	Page	Part Number	Page	Part Number	Page	Part Number	Page
NT 7356§	MR 18	NT 8045§	MR 34	NT 8214§	MN 5	NT 8391§	MR 56·1	PWN 105	MA 2
NT 7356§	MR 19	NT 8046§	MR 1·2	NT 8215§	MF 23	NT 8395§	MR 47	PWN 105	ME 1·1
NT 7363§	MH 3	NT 8046§	MR 5·1	NT 8216§	MF 23	NT 8395§	MR 48·1	PWN 105	MJ 3
NT 7367§	MF 29	NT 8049§	MF 29	NT 8217§	MR 83	NT 8396§	MR 47	PWN 105	MJ 4
NT 7367§	MM 4	NT 8056§	MR 38	NT 8219§	MH 6	NT 8396§	MR 48·1	PWN 105	MJ 5
NT 7368§	MS 7	NT 8059§	MR 42	NT 8220§	MR 38	NT 8397§	MR 47	PWN 105	MJ 6
NT 7371§	MG 2	NT 8060§	MJ 1	NT 8221§	MR 83	NT 8398§	MR 47	PWN 105	MJ 7
NT 7376§	MH 6	NT 8061§	MJ 2	NT 8222§	MS 7	NT 8398§	MR 48·1	PWN 105	MR 10
NT 7384§	MS 1·1	NT 8062§	MS 4	NT 8223§	MR 84	NT 8422§	ML 1	PWN 105	MR 22
NT 7387§	MS 1·1	NT 8063§	MF 8	NT 8224§	MF 5			PWN 105	MR 34
NT 7388§	MH 4	NT 8064§	MF 8	NT 8249§	MN 1·1	UHN 405	MH 4	PWN 105	MR 35
NT 7388§	MR 37	NT 8064§	MS 4	NT 8254§	MR 36			PWN 105	MR 70
NT 7394§	MS 1·1	NT 8065§	MF 8	NT 8255§	MR 36	PCR 0307	MR 53	PWN 105	MR 78·1
NT 7395§	MS 1·1	NT 8065§	MF 14	NT 8265§	MR 42	PCR 0411	MR 48	PWN 105	MR 79
NT 7396§	MC 5	NT 8073§	MH 5	NT 8269§	MD 5	PCR 0411	MR 48·1	PWN 105	MR 84
NT 7398§	MS 2	NT 8077§	MH 3	NT 8278§	MF 21	PCR 0411	MR 53	PWN 105	MS 1·1
NT 7399§	MS 2	NT 8078§	MP 1	NT 8279§	MD 2	PCR 0609	MK 1·1	PWN 105	MS 2
NT 7400§	MS 2	NT 8080§	MH 5	NT 8281§	MD 5	PCR 0611	MR 81·1	PWN 106	MA 2
NT 7400§	MS 3	NT 8081§	MH 5	NT 8283§	MD 5	PCR 0709	MK 1·1	PWN 106	ME 1·1
NT 7401§	MS 2	NT 8089§	MF 1·1	NT 8284§	MH 6	PCR 0709	MK 4	PWN 106	MR 33
NT 7404§	MS 2	NT 8090§	MF 1·1	NT 8286§	MN 1·1			PWN 106	MR 34
NT 7405§	MS 2	NT 8091§	MF 6	NT 8297§	MC 5	PFS 106	MN 1·1	PWN 106	MS 2
NT 7406§	MS 2	NT 8092§	MF 6	NT 8299§	MF 21			PWN 106	MS 3
NT 7407§	MS 2	NT 8103§	MF 21	NT 8299§	MF 24	PMN 0407	MF 18	PWN 107	MF 5
NT 7408§	MS 1·1	NT 8107§	MM 2	NT 8299§	MF 27	PMN 0407	MS 13	PWN 107	MF 22
NT 7409§	MS 2	NT 8107§	MM 4	NT 8302§	MM 6	PMN 0410	MF 2	PWN 107	MF 24
NT 7420§	MR 34	NT 8110§	MH 6	NT 8303§	MK 4	PMN 0410	MF 19	PWN 107	MF 27
NT 7421§	MF 29	NT 8111§	MD 5	NT 8304§	MK 4	PMN 0416	MF 29	PWN 107	MN 3
NT 7423§	MF 3	NT 8114§	MJ 5	NT 8305§	MK 4	PMN 0416	MM 4	PWN 107	MN 4
NT 7423§	MF 6	NT 8121§	MN 3	NT 8306§	MK 4			PWN 107	MN 8
NT 7424§	MF 3	NT 8122§	MN 3	NT 8308§	ML 1	PMZ 0206	ML 1	PWN 107	MR 14·1
NT 7424§	MF 6	NT 8123§	MR 17	NT 8311§	MR 1·2	PMZ 0206	ML 3	PWN 107	MR 61·1
NT 7424§	MS 5	NT 8126§	MN 1·1	NT 8311§	MR 5·1	PMZ 0206	MR 48·1	PWN 107	MR 63
NT 7425§	MK 6	NT 8129§	MR 84	NT 8312§	MN 4	PMZ 0304	MR 44	PWN 107	MR 65
NT 7430§	MH 4	NT 8136§	MN 2	NT 8314§	MK 4	PMZ 0304	MR 45	PWN 107	MR 78·1
NT 7430§	MR 37	NT 8138§	MN 2	NT 8315§	MG 1	PMZ 0304	MR 48	PWN 108	MM 6
NT 7431§	MC 6	NT 8139§	MN 2	NT 8317§	MC 6	PMZ 0304	MR 52	PWN 109	MJ 5
NT 7433§	MK 6	NT 8140§	MN 2	NT 8321§	MF 21	PMZ 0305	MR 51	PWN 109	MR 1·2
NT 7440§	MK 7	NT 8141§	MN 2	NT 8321§	MF 24	PMZ 0305	MR 54	PWN 109	MR 2
NT 7442§	MH 4	NT 8145§	MA 4	NT 8321§	MF 27	PMZ 0306	MK 3	PWN 109	MR 3
NT 7442§	MR 37	NT 8145§	MR 85	NT 8321§	MR 63	PMZ 0306	MK 5	PWN 109	MR 6
NT 7443§	MF 8	NT 8146§	MA 4	NT 8321§	MR 65	PMZ 0306	MR 51	PWN 109	MR 34
NT 7443§	MS 5	NT 8146§	MR 85	NT 8328§	MD 5	PMZ 0306	MR 54	PWN 110	MG 1
NT 7444§	MF 8	NT 8147§	MA 4	NT 8330§	MH 4	PMZ 0306	MR 81	PWN 110	MG 4
NT 7444§	MS 5	NT 8147§	MR 85	NT 8330§	MR 37	PMZ 0308	MC 4	PWN 110	MJ 4
NT 7445§	ML 3	NT 8148§	MA 4	NT 8332§	MR 13·4	PMZ 0308	MK 4	PWN 110	MJ 5
NT 7446§	MR 27	NT 8153§	MA 4	NT 8332§	MR 28	PMZ 0308	MR 43	PWN 110	MJ 7
NT 7446§	MR 28	NT 8153§	MR 85	NT 8333§	MR 13·4	PMZ 0308	MR 45	PWN 110	MR 28
NT 7446§	MR 28·1	NT 8154§	MN 4	NT 8333§	MR 27	PMZ 0308	MR 48	PWN 110	MR 70
NT 7446§	MR 28·2	NT 8155§	MN 4	NT 8334§	MR 27	PMZ 0308	MR 48·1	PWN 110	MR 80
NT 7449§	MM 3	NT 8159§	MR 36	NT 8334§	MR 28	PMZ 0308	MR 55	PWN 110	MR 80·1
NT 7453§	MO 3	NT 8162§	MH 5	NT 8335§	MR 27	PMZ 0310	MK 6	PWN 112	MH 2
NT 7453§	MO 4	NT 8163§	MH 5	NT 8335§	MR 28	PMZ 0310	MR 52	PWN 112	MR 58·1
NT 7453§	MO 5	NT 8166§	MO 3	NT 8339§	MR 29	PMZ 0316	MR 52	PWN 114	MH 2
NT 7453§	MR 11	NT 8168§	MO 3	NT 8340§	MR 29	PMZ 0318	MK 7	PWN 116	ME 1·1
NT 7453§	MR 13·1	NT 8169§	MO 3	NT 8347§	MM 6	PMZ 0406	MR 48	PWN 118	MJ 6
NT 7453§	MR 27	NT 8171§	MO 3	NT 8348§	MJ 1	PMZ 0406	MR 48·1	PWN 204	MN 7
NT 7453§	MR 28	NT 8171§	MO 4	NT 8349§	MJ 1	PMZ 0408	ML 1	PWN 205	MS 1·1
NT 7453§	MR 28·1	NT 8171§	MO 5	NT 8350§	MJ 5	PMZ 0408	ML 4	PWN 210	MR 35
NT 7453§	MR 28·2	NT 8174§	MR 62	NT 8353§	MJ 1	PMZ 0408	MN 3	PWN 212	MO 4
NT 7453§	MR 30	NT 8175§	MR 13·3	NT 8356§	MF 10	PMZ 0408	MN 6	PWN 212	MO 5
NT 7457§	MR 41	NT 8175§	MR 23	NT 8357§	MF 10	PMZ 0408	MN 7	PWN 305	MR 75
NT 7464§	MG 4	NT 8178§	MC 5	NT 8358§	MF 10	PMZ 0408	MR 44	PWN 0410	MF 2
NT 7472§	MJ 5	NT 8181§	MR 84	NT 8359§	MF 10	PMZ 0408	MR 48		
NT 7472§	MJ 7	NT 8182§	MR 84	NT 8360§	MF 10	PMZ 0408	MR 52	PWZ 103	MK 4
NT 7472§	MR 70	NT 8185§	MR 84	NT 8361§	MR 55	PMZ 0408	MR 55	PWZ 103	MK 6
NT 7473§	MJ 5	NT 8186§	MR 84	NT 8362§	MF 1·1	PMZ 0410	MR 44	PWZ 103	ML 1
NT 7474§	MJ 5	NT 8187§	MR 84	NT 8363§	MR 25·1	PMZ 0410	MR 48	PWZ 103	MR 22
NT 7484§	MF 2	NT 8189§	MR 84	NT 8365§	MR 25·1	PMZ 0412	MN 6	PWZ 104	MA 2
NT 7485§	MS 4	NT 8191§	MR 82·1	NT 8366§	MR 26	PMZ 0412	MR 45	PWZ 104	MA 3
NT 7497§	MF 7	NT 8192§	MR 82·1	NT 8367§	MR 25·1	PMZ 0412	MR 48	PWZ 104	MA 4
NT 7497§	MF 8	NT 8194§	MR 83	NT 8369§	MD 5	PMZ 0412	MR 52	PWZ 104	MF 30
NT 7497§	MS 5	NT 8195§	MR 83	NT 8373§	ML 4	PMZ 0418	MN 2	PWZ 104	MK 6
NT 7499§	MF 8	NT 8198§	MR 83	NT 8373§	MR 57	PMZ 0418	MR 13	PWZ 104	MN 2
NT 7499§	MS 5	NT 8200§	MS 5	NT 8374§	ML 4	PMZ 0418	MR 13·2	PWZ 104	MN 3
NT 7575§	MF 1·1	NT 8201§	MS 5	NT 8374§	MR 57	PMZ 0512	MN 2	PWZ 104	MN 6
NT 7576§	MJ 1	NT 8202§	MR 82·1	NT 8375§	MR 57	PMZ 0532	MD 5	PWZ 104	MR 22
NT 8001§	MF 22	NT 8208§	MN 4	NT 8378§	MR 25·1	PMZ 0540	MD 4	PWZ 104	MR 52
NT 8001§	MF 24	NT 8208§	MR 85	NT 8379§	MR 25·1			PWZ 104	MR 84
NT 8001§	MF 27·1	NT 8209§	MN 7	NT 8380§	MK 7	PTN 603	MN 7	PWZ 104	MR 85
NT 8002§	MG 4	NT 8209§	MR 85	NT 8383§	MK 4			PWZ 105	MA 2
NT 8003§	MG 4	NT 8210§	MF 10	NT 8384§	MK 4	PTP 603	MR 40·1	PWZ 105	MA 3
NT 8044§	MR 13·4	NT 8211§	MS 7	NT 8386§	MR 56·1			PWZ 105	MA 4
NT 8044§	MR 24	NT 8213§	MN 5	NT 8390§	MR 57	PWN 103	MJ 4	PWZ 105	MF 25

§ Parts peculiar to Tractor only

Part Number Index—*continued*

Part Number	Page	Part Number	Page	Part Number	Page	Part Number	Page	Part Number	Page
PWZ 105	MF 28	TRS 1216	MF 25						
PWZ 105	MK 6	TRS 1216	MF 28						
PWZ 105	MR 28	TRS 1216	MR 59·1						
PWZ 105	MR 59·1	TRS 1216	MR 60						
PWZ 105	MR 60	TRS 1216	MR 64						
PWZ 105	MR 64	TRS 1216	MR 66						
PWZ 105	MR 66	TRS 1317	MR 78·1						
PWZ 105	MR 75	TRS 1620	MH 2						
PWZ 105	MR 76	TRS 1620	MH 5						
PWZ 105	MR 84	TRS 1721	MR 11						
PWZ 105	MR 85	TRS 1721	MR 13·1						
PWZ 106	MK 1·1								
PWZ 106	MK 4	UHN 105	MH 2						
PWZ 106	MN 5·1	UHN 105	MH 3						
PWZ 106	MR 44	UHN 105	MH 5						
PWZ 106	MR 48	UHN 105	MH 6						
PWZ 106	MR 55	UHN 105	MJ 1						
PWZ 106	MR 84	UHN 105	MJ 6						
PWZ 107	MN 4	UHN 105	MR 13·3						
PWZ 108	MF 25	UHN 105	MR 23						
PWZ 108	MF 33	UHN 105	MR 28						
PWZ 108	MN 5·1	UHN 105	MR 34						
PWZ 108	MR 59·1	UHN 105	MR 36						
PWZ 108	MR 60	UHN 105	MR 38						
PWZ 108	MR 64	UHN 105	MR 58·1						
PWZ 108	MR 68	UHN 305	MH 1						
PWZ 109	MR 45	UHN 305	MH 4						
PWZ 109	MR 72·1	UHN 305	MR 37						
PWZ 110	MG 4	UHN 400	MR 80						
PWZ 112	MM 5·1	UHN 400	MR 80·1						
PWZ 112	MR 71	UHN 405	MH 4						
PWZ 205	MR 59·1	UHN 405	MM 6						
RFN 403	MR 54	V 547	MJ 4						
		V 6203	MJ 4						
RMZ 0424	MR 26	V 6268A	MJ 4						
RRS 0304	MN 5	WKN 404	MR 28						
RRS 0314	MS 2	WKN 405	MR 78·1						
RRS 0314	MS 3	WKN 505	MH 2						
RRS 0315	MR 70	WKN 505	MH 5						
RRS 0316	MJ 4	WKN 506	MR 13·2						
RRS 0316	MJ 7	WKN 506	MR 14·1						
RRS 0316	MR 26	WKN 506	MR 15						
RRS 0412	MJ 4	WKN 506	MR 16						
RRS 0412	MJ 7	WKN 507	MH 2						
RRS 0412	MR 70	WKN 606	MG 1						
RRS 0422	MR 26	WKN 606	MG 4						
		WKN 606	MR 14·1						
SP 22§	MR 14·1								
SP 32§	MR 26	ZCS 0608	MN 5·1						
ST 270	MP 1	ZPS 0310	MR 72·1						
ST 278	MP 1								
ST 279	MP 1	79106§	MF 30						
ST 286	MP 1	79107§	MF 30						
ST 299	MP 1	79108§	MF 30						
ST 302	MP 1	79109§	MF 30						
ST 303	MP 1	79110§	MF 30						
ST 304	MP 1	79111§	MF 30						
ST 305	MP 1	79112§	MF 30						
ST 306	MP 1	79113§	MF 30						
ST 324	MP 1	79114§	MF 30						
ST 325	MP 1	79115§	MF 30						
ST 326	MP 1	79116§	MF 30						
ST 328	MP 1	79117§	MF 30						
ST 329	MP 1	79118§	MF 30						
ST 330	MP 1	79119§	MF 30						
		79120§	MF 30						
TNN 307	MR 21	79121§	MF 30						
		79304§	MR 40·1						
TRP 924	MR 22	79496§	MN 2						
		79497§	MN 5						
TRS 0710	MF 14	79498§	MR 5·1						
TRS 0710	MR 13	79513§	MF 30						
TRS 0710	MR 13·2	83559§	MR 48						
TRS 0710	MR 21	116149§	MR 45						
TRS 0710	MS 10	117172§	MK 6						
TRS 0811	MR 21	117509§	ML 3						
TRS 0912	MF 17	118223§	MG 1						
TRS 0912	MR 78·1	118223§	MG 4						
TRS 0912	MR 83								
TRS 0912	MS 14								
TRS 1013	MR 9								

§ Parts peculiar to Tractor only

Index to Revised Pages/Illustrations

(Up to and including Circulation 11)

The following is a complete index of pages/plates now comprising this Service Parts List, giving the latest issue of each page/plate. All revised pages/plates issued with this circulation of revised pages are denoted by a dagger which appears against the page/plate reference.

PAGE/ PLATE	ISSUE	PAGE/ PLATE	ISSUE	PAGE/ PLATE	ISSUE	PAGE/ PLATE	ISSUE	PAGE/ PLATE	ISSUE	PAGE/ PLATE	ISSUE	PAGE/ PLATE	ISSUE
†1	3	†39	5	ME 1	1	MG 1	2	MM 4	3	MR 10	2	MR 39	2
2	2	†40	5			MG 1·1	1	MM 5	1	MR 11	3	MR 39·1	2
3	3	†41	5	MF 1	2	MG 2	2	MM 6	3	MR 12	2	MR 40	2
4	3	†42	5	MF 1·1	2	MG 3	2			MR 13	3	MR 40·1	1
5	2	†43	8	MF 2	3	MG 4	1	MN 1	3	MR 13·1	1	MR 41	1
6	2	†44	4	MF 3	1			MN 1·1	2	MR 13·2	1	MR 42	2
7	2	†45	4	MF 4	3	MH 1	1	MN 2	1	MR 13·3	1	MR 43	1
8	2	†46	4	MF 5	1	MH 2	1	MN 3	2	MR 13·4	1	MR 44	1
9	2	†47	4	MF 6	1	MH 3	2	MN 4	1	MR 14	2	MR 45	1
10	2	†48	4	MF 7	1	MH 4	1	†MN 5	4	MR 14·1	1	MR 46	1
11	2	†49	4	MF 8	1	MH 5	2	†MN 5·1	3	MR 15	1	MR 47	1
12	2	†50	4	MF 9	2	MH 6	2	MN 6	3	†MR 16	4	MR 48	2
13	2	†51	4	MF 10	1			MN 7	2	MR 17	2	MR 48·1	1
14	2	†52	4	MF 11	2	MJ 1	1	MN 8	2	MR 18	2	†MR 49	4
15	4	†53	4	MF 12	3	MJ 2	1			MR 19	3	MR 50	1
16	3	†54	4	MF 13	4	MJ 3	1	MO 1	2	MR 20	1	MR 51	3
17	2			MF 14	2	MJ 4	2	MO 1·1	2	MR 21	3	MR 52	3
18	2			MF 15	2	MJ 5	2	MO 2	1	MR 22	2	MR 53	2
19	2	MA 1	2	MF 16	1	MJ 6	3	MO 3	1	†MR 23	4	MR 54	1
20	2	MA 1·1	1	MF 17	5	MJ 7	3	MO 4	3	MR 24	3	MR 55	1
21	2	MA 2	2	MF 18	4			MO 5	3	MR 25	2	MR 56	2
22	2	MA 3	1	MF 19	4	MK 1	2			MR 25·1	2	MR 56·1	1
23	2	MA 4	1	MF 20	3	MK 1·1	2	MP 1	2	MR 26	2	MR 57	2
24	2			MF 21	3	MK 2	1	MP 2	2	†MR 27	4	MR 58	2
25	2	MC 1	2	MF 22	5	MK 3	3			†MR 28	4	MR 58·1	1
26	2	MC 1·1	1	†MF 23	4	MK 4	2	MR 1	2	†MR 28·1	2	MR 59	2
27	2	MC 2	1	MF 24	4	MK 5	3	MR 1·1	1	†MR 28·2	2	MR 59·1	2
28	2	MC 3	1	MF 25	1	MK 6	2	MR 1·2	1	MR 29	1	MR 60	1
29	2	MC 4	1	†MF 26	4	MK 7	2	MR 2	4	MR 30	1	MR 61	2
30	3	MC 5	2	MF 27	5			MR 3	5	MR 31	2	MR 61·1	2
31	3	MC 6	1	†MF 27·1	4	ML 1	3	MR 4	2	†MR 31·1	3	MR 62	2
32	5			MF 28	1	ML 2	2	MR 5	2	MR 32	2	MR 63	2
33	5	MD 1	1	MF 29	1	ML 3	3	MR 5·1	1	MR 33	3	MR 64	1
34	5	MD 2	1	MF 30	2	ML 4	3	MR 6	1	MR 34	1	MR 65	3
35	4	†MD 3	2	MF 31	1			MR 7	1	MR 35	1	MR 66	1
36	4	MD 4	1	MF 32	1	MM 1	3	MR 8	2	MR 36	1	MR 67	1
†37	5	MD 5	1	MF 33	3	MM 2	1	MR 8·1	3	MR 37	1	MR 68	2
†38	5					MM 3	1	MR 9	3	MR 38	1	MR 69	2

Index to Revised Pages/Illustrations—*continued*

PAGE/ PLATE	ISSUE	PAGE/ PLATE	ISSUE	PAGE/ PLATE	ISSUE	PAGE/ PLATE	ISSUE	PAGE/ PLATE	ISSUE	PAGE/ PLATE	ISSUE	PAGE/ PLATE	ISSUE
MR 70	3	A 3	1	F 28	2	N 7	1	R 32	1	S 1	3		
MR 71	1							R 33	2	S 2	2		
MR 72	2	C 1	2	G 1	1	O 1	1	R 34	1	S 3	1		
MR 72-1	2	C 2	1	G 2	1	O 2	1	R 35	1	S 4	1		
MR 73	2					O 3	3	R 36	2	S 5	1		
MR 74	2	D 1	1	H 1	1	O 4	2	R 37	1	S 6	1		
MR 75	3	D 2	1	H 2	1			R 38	1	S 7	1		
MR 76	2	D 3	1	H 3	1	P 1	1	R 39	3	S 8	1		
MR 77	3	D 4	1	H 4	1			R 40	3	S 9	3		
MR 78	2	D 5	1	H 5	1	R 1	2	R 41	4	S 10	1		
MR 78-1	3			H 6	1	R 2	2	R 42	3	S 11	1		
MR 79	2	E 1	1			R 3	3	R 43	1	S 12	3		
MR 80	4			J 1	1	R 5	1	R 44	2	S 13	1		
MR 80-1	2	F 1	2	J 2	1	R 6	1	R 45	2				
MR 81	3	F 2	2	J 3	1	R 7	3	R 46	2				
MR 81-1	2	F 3	1	J 4	2	R 8	1	R 47	2				
MR 82	2	F 4	2	J 5	2	R 9	2	R 48	1				
MR 82-1	4	F 5	1			R 10	1	R 49	1				
MR 83	3	F 6	1	K 1	3	R 11	1	R 50	1				
MR 84	2	F 7	1	K 2	4	R 12	1	R 51	1				
MR 85	2	F 8	1	K 3	1	R 13	2	R 52	1				
		F 9	1	K 4	1	R 14	1	R 53	2				
MS 1	2	F 10	1			R 15	1	R 54	1				
MS 1-1	2	F 11	1	L 1	1	R 16	2	R 55	2				
MS 2	1	F 12	2	L 2	1	R 17	1	R 56	1				
MS 3	1	F 13	1	L 3	2	R 18	3	R 57	1				
MS 4	3	F 14	3			R 19	1	R 58	1				
MS 5	2	F 15	1	M 1	1	R 20	2	R 59	1				
MS 6	2	F 16	2	M 2	1	R 20-1	1	R 60	2				
MS 7	2	F 16-1	2	M 3	1	R 21	1	R 61	1				
MS 8	4	F 17	1	M 4	1	R 22	1	R 62	2				
MS 9	3	F 18	1	M 5	1	R 23	1	R 63	2				
MS 10	5	F 19	1	M 6	2	R 23-1	1	R 64	2				
MS 11	2	F 20	1			R 24	1	R 65	2				
MS 12	2	F 21	1	N 1	1	R 25	3	R 65-1	1				
MS 13	4	F 22	1	N 2	1	R 26	2	R 66	2				
MS 14	4	F 23	1	N 3	1	R 27	2	R 66-1	1				
		F 24	1	N 4	2	R 28	1	R 67	1				
PLATES		F 25	1	†N 4-1	3	R 29	1	R 68	1				
A 1	1	F 26	1	N 5	1	R 30	1	R 69	1				
A 2	2	F 27	1	N 6	1	R 31	1	R 70	1				

MA

ENGINE

Full details of the engines applicable to the Nuffield Tractor are contained in Tractor Engine Service Parts List, publication AKD 3515.

	Page	Plate
†EXHAUST PIPE—SILENCER	MA 1·1	A 1
THROTTLE CONTROL RODS...	MA 3, MA 4	A 3
THROTTLE LEVER	MA 2	A 2

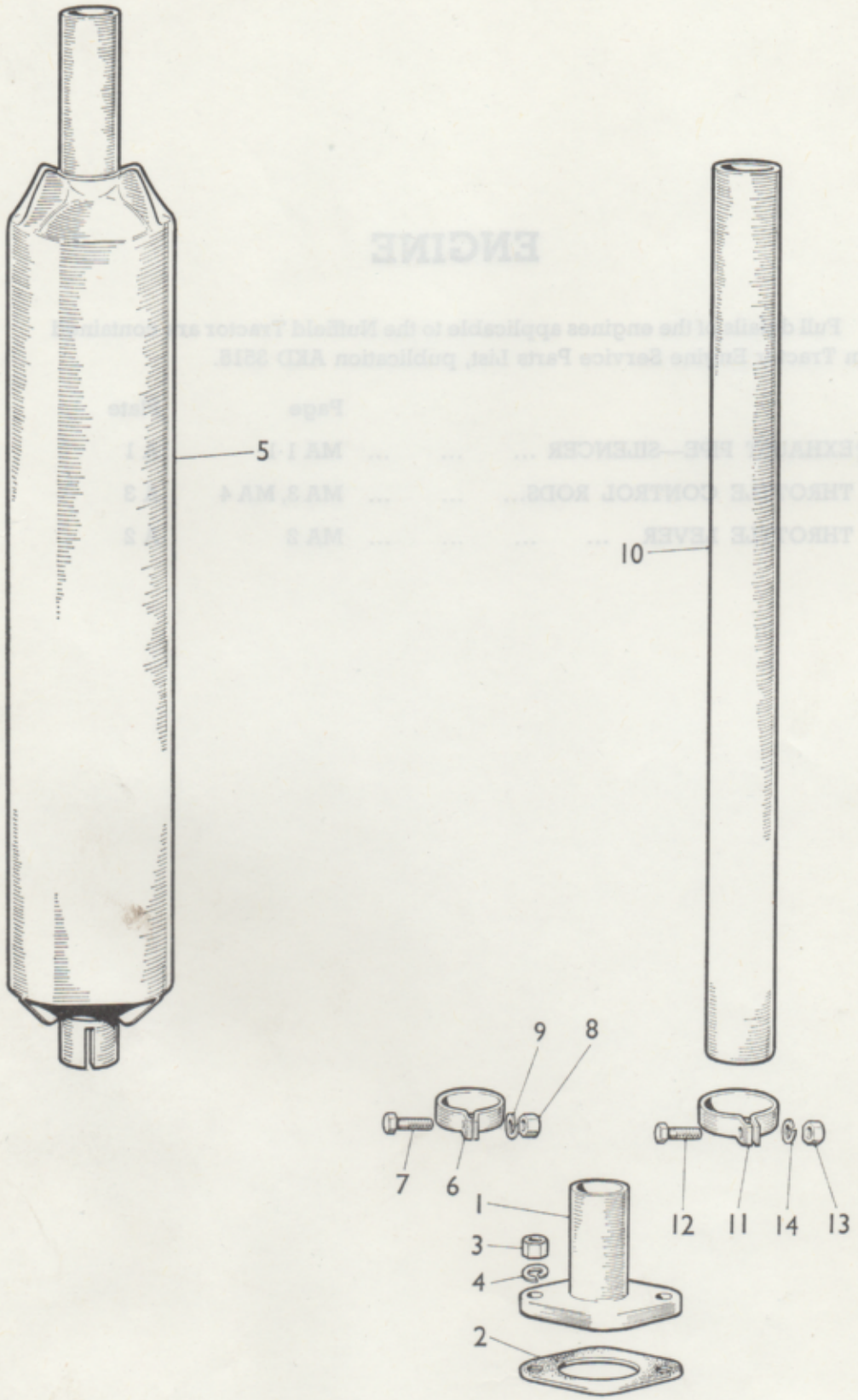

To face page MA 1·1

DESCRIPTION	Part No.	Illus. No.	Quantity	Stock recommds. DIST. Exp.	Stock recommds. DIST. UK	Stock recommds. D	Change Point	REMARKS
EXHAUST PIPE—SILENCER								
Stand pipe—exhaust	NT 4243§	1	1	★	★			
Gasket—stand pipe	AMK 5028	2	1	★	★			
Nut—stand pipe stud	†ATJ 1001 §	3	2					Not available; use AEC 350
Nut—stand pipe stud	†AEC 350	3	2					
Washer—spring—nut	LWN 206	4	2					
Silencer	ARJ 7§		1					Part No. change; was NT 7070 Not available; use ARJ 33
Silencer	ARJ 33§	5	1	★	★			
Clip—silencer to stand pipe	NT 5302§	6	1					
Screw—clip	HNS 0507	7	1					
Nut—screw	BNN 105	8	1					
Washer—spring—nut	LWN 205	9	1					
Extension—silencer	NT 5080§	10	1					Optional extra
Clip—extension to silencer	**3DL** NT 5639§	11	1					
Screw—clip	**342** HNS 0507	12	1					
Nut—screw	**10/42** FNN 105	13	1					
Washer—spring—nut	LWN 205	14	1					

§ Parts peculiar to Tractor only

See title-page for application

† Revised Information

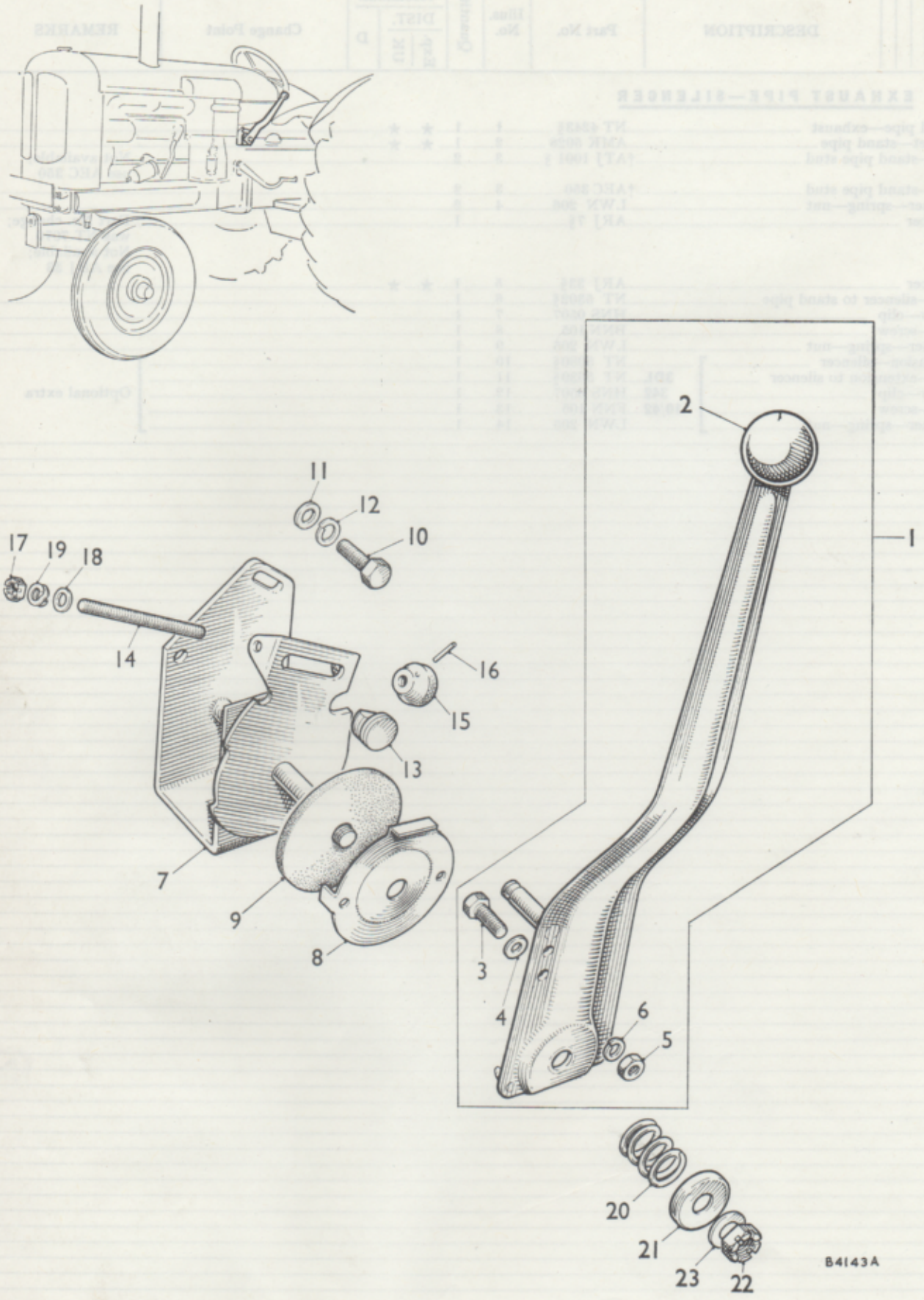
1
2
3
4
5
6
7
8
9
10
11
12
13
14
15
16
17
18
19
20
21
22
23
B4143A

DESCRIPTION	Part No.	Illus. No.	Quantity	Stock recommds. DIST. Exp.	Stock recommds. DIST. UK	Stock recommds. D	Change Point	REMARKS
THROTTLE LINKAGE								
Lever—throttle	NT 4333§	1	1					
Knob—lever	†NT 1625§	2	1					
Screw—stop	†HNS 0505	3	1					
Washer—plain—screw	†PWZ 105	4	1					
Nut—screw	†FNZ 105	5	1					
Washer—spring—nut	†LWZ 205	6	1					
Brackets—stop	NT 5683§	7	1				4DM-DE1001 on, IDE10388 on, 787-501 on 792-501 on 3DL-771-501 on, 772-501 on 342-24000 to 51795	
	ATJ 3069§	7	1				460-24000 on, 342-51796 on	
	ATJ 3127§	7	1				10/42-57420 on, 10/60-57420 on	
Plate—friction	NT 4502§	8	1				4DM-DE1001 on, IDE10388 on, 787-501 on, 792-501 on 3DL-771-501 on, 772-501 on 342-24000 to 51796	
Plate—friction	NT 5203§	8	1				460-24000 on, 342-51797 on 10/42-57420 on 10/60-57420 on	
Disc—friction	NT 5926§	9	1					
Screw—stop bracket to fuel tank support	HNS 0506	10	2					
Washer—plain—screw	PWN 105	11	2					
Washer—spring—screw	LWN 205	12	2					
Stop—sliding	NT 5679§	13	1					
Screw—adjusting	NT 5681§	14	1					
Nut—knurled—screw	NT 5680§	15	1					
Pin—nut	NT 3164§	16	1					
Nut—slotted—screw	FNZ 304	17	1					
Washer—plain—nut	PWZ 104	18	1					
Washer—spring—nut	AJD 7722 N	19	1					
Spring—compression	NT 3162§	20	1				4DM-DE1001 on, IDE10388 on, 787-501 on, 792-501 on 3DL-771-501 on, 772-501 on 342-24000 to 51796	
Spring—compression	ATJ 3065§	20	1				460-24000 on, 342-51797 on 10/42-57420 on 10/60-57420 on	
Cup—spring locating	NT 2455§	21	1					
Nut—slotted	FNZ 306	22	1					
Washer—plain—nut	PWN 106	23	1					

§ Parts peculiar to Tractor only

See title-page for application

† Revised Information—Issue 2

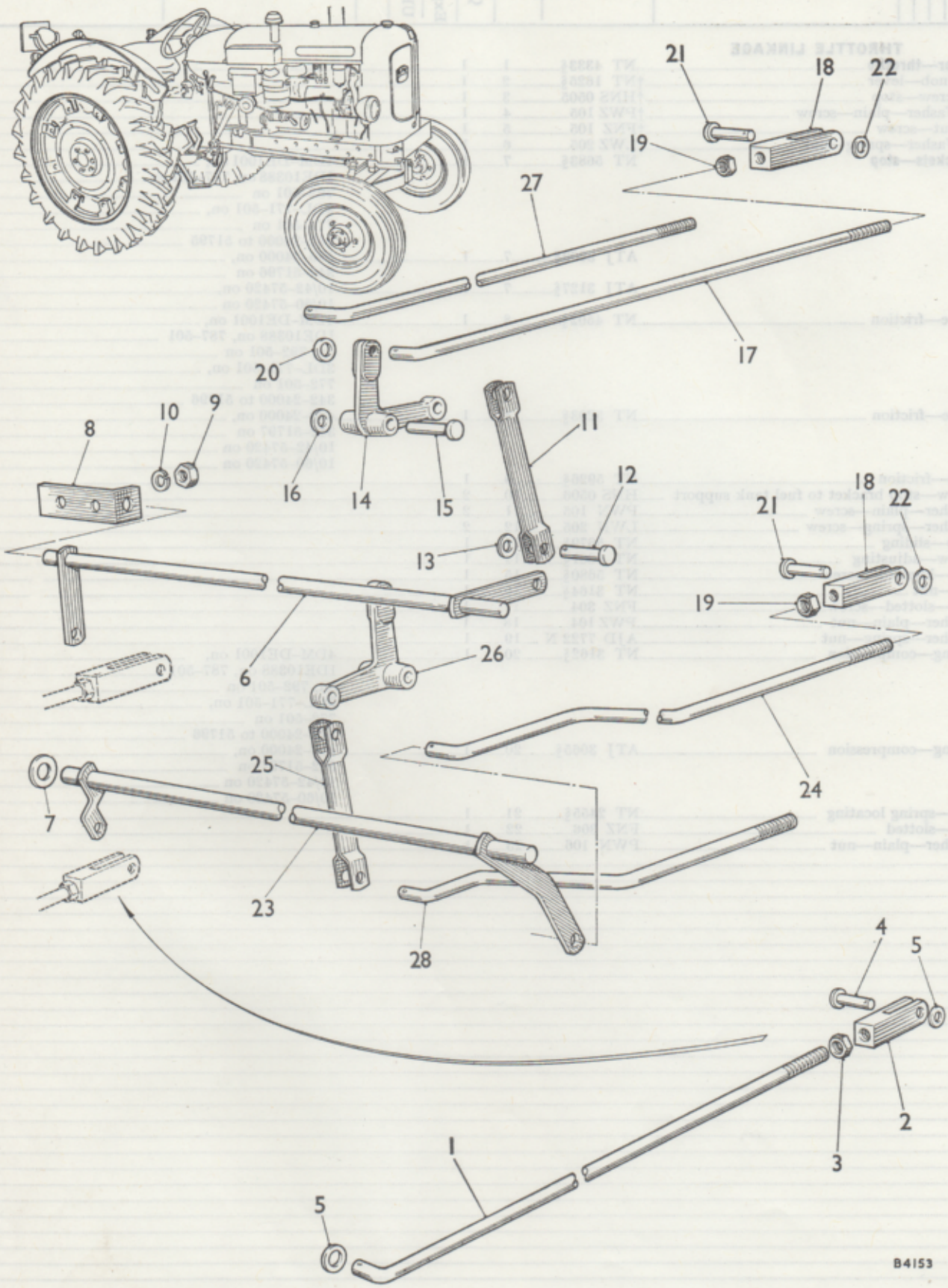

To face page MA 3

DESCRIPTION	Part No.	Illus. No.	Quantity	Stock recommds. DIST. Exp.	Stock recommds. DIST. UK	Stock recommds. D	Change Point	REMARKS
Throttle Linkage—*continued*								
Rod assembly—control	NT 7090§		1					Not available; use component parts
Rod—control	NT 6602§	1	1					
Jaw—rod	NT 6601§	2	1					
Nut—lock—jaw	FNN 204	3	1					
Pin—clevis—jaw to cross-shaft	CLZ 0412	4	1					
Washer—plain—pin	PWZ 104	5	1					
Washer—plain—rod to lever	PWZ 104	5	1					
Cross-shaft	NT 6697§	6	1					
Washer—plain—cross-shaft	PWZ 105	7	1					
Bracket—cross-shaft	NT 6976§	8	1					
Nut—bracket to battery tray	FNZ 104	9	2					
Washer—spring—nut	LWZ 204	10	2					
Link—cross-shaft to bell-crank lever	NT 6700§	11	1				DE1001 on IDE10388 on	
Pin—link	CLZ 0412	12	2				787–501 on	
Washer—plain—pin	PWZ 104	13	2				792–501 on	
Lever—bell-crank	NT 6746§	14	1					
Pin—fulcrum—lever	CLZ 0525	15	1					
Washer—plain—pin	PWZ 105	16	1					
Rod assembly—control—to venturi	NT 7091§		1					Not available: use component parts
Rod—control	NT 6704§	17	1					
Jaw—rod	NT 6601§	18	1					
Nut—lock—jaw	FNN 204	19	1					
Washer—plain—rod to bell-crank lever	PWZ 104	20	1					
Pin—control rod jaw to venturi	CLZ 0412	21	1					
Washer—plain—pin	PWZ 104	22	1					
Rod assembly—control	NT 7090§		1					Not available; use component parts
Rod—control	NT 6602§	1	1					
Jaw—rod	NT 6601§	2	1					
Nut—lock—jaw	FNN 204	3	1					
Pin—clevis—jaw to cross-shaft	CLZ 0412	4	1					
Washer—plain—pin	PWZ 104	5	1					
Washer—plain—rod to lever	PWZ 104	5	1					
Cross-shaft	ATJ 3051§		1					Not available; use ATJ 3082
Cross-shaft	ATJ 3082§	23	1					
Washer—plain—cross-shaft	PWZ 105	7	1					
Rod assembly—control—to injection pump	ATJ 3054§		1				24000 on	Not available
Rod assembly—control—to injection pump	ATJ 3086§		1					Not available; use component parts
Rod—control	ATJ 3055§		1					Not available; use ATJ 3085
Rod—control	ATJ 3085§	24	1					
Jaw—rod	NT 6601§	18	1					
Nut—lock—jaw	FNN 204	19	1					
Washer—plain—rod to cross-shaft	PWZ 104	20	1					
Pin—control rod jaw to injection pump	CLZ 0412	21	1					
Washer—plain—pin	PWZ 104	22	1					

460, 10/60

§ **Parts peculiar to Tractor only**

See title page for application

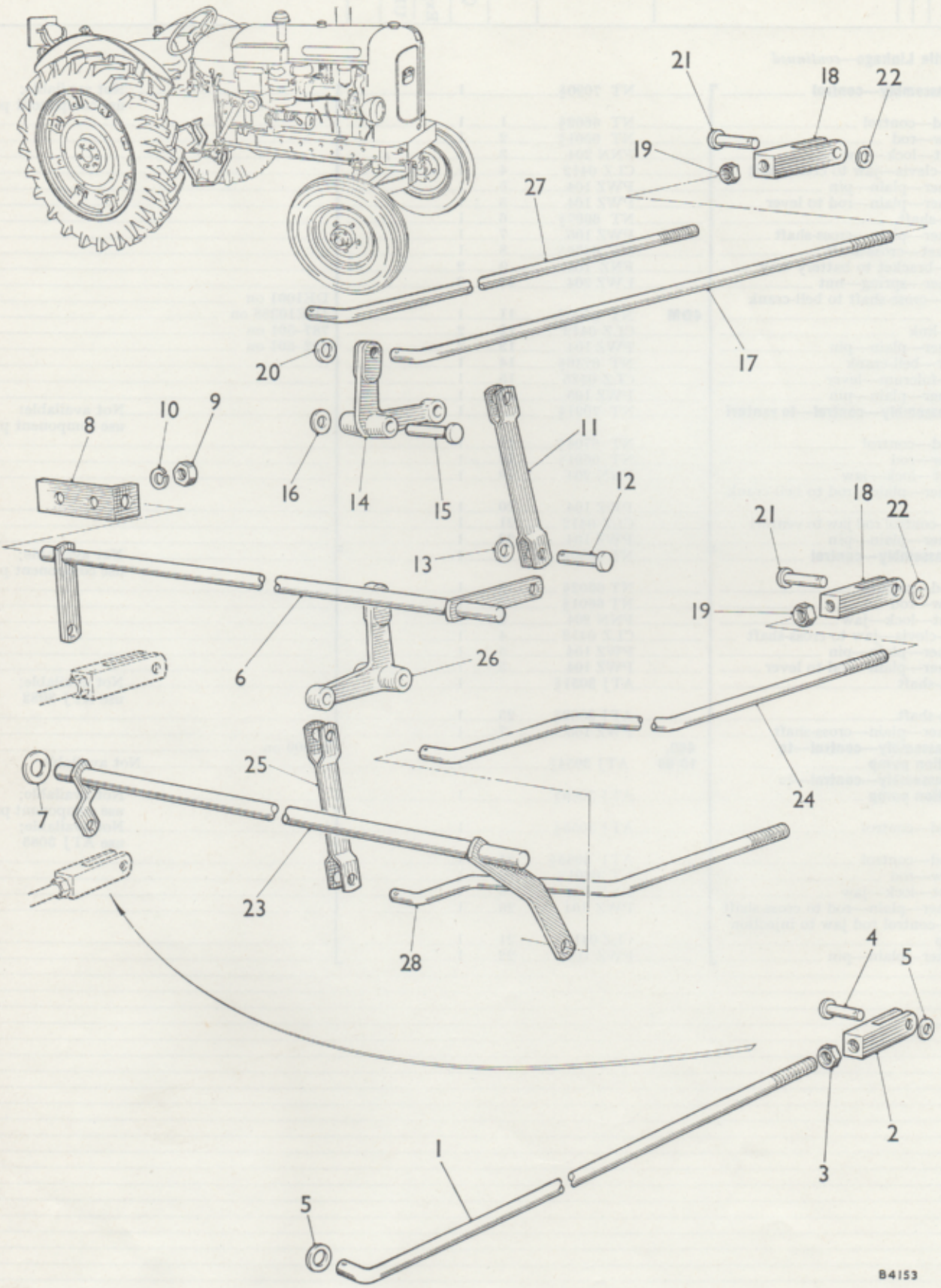

To face page MA 4

DESCRIPTION		Part No.	Illus. No.	Quantity	Stock recommds. DIST. Exp.	Stock recommds. DIST. UK	Stock recommds. D	Change Point	REMARKS
Throttle Linkage—*continued*									
Rod assembly—control		NT 7090§		1					Not available; use component parts
Rod—control		NT 6602§	1	1					
Jaw—rod		NT 6601§	2	1					
Nut—lock—jaw		FNN 204	3	1					
Pin—clevis—jaw to cross-shaft		CLZ 0412	4	1					
Washer—plain—pin		PWZ 104	5	1					
Washer—plain—rod to lever		PWZ 104	5	1					
Cross-shaft		NT 8148§		1					Not available; use ATJ 3005
Cross-shaft		ATJ 3005§	6	1					
Washer—plain—cross-shaft		PWZ 105	7	1					
Link—cross-shaft to bell-crank lever	**3DL,**	NT 8145§	25	1				3DL–771–501 on,	
Pin—link	**342**	CLZ 0410	12	2				772–501 on	
Washer—plain—pin		PWZ 104	13	2				342–24000 to 51795	
Lever—bell-crank		NT 8153§	26	1					
Pin—fulcrum—lever		CLZ 0525	15	1					
Washer—plain—pin		PWZ 105	16	1					
Rod assembly—control to venturi		NT 8146§		1					Not available; use component parts
Rod—control		NT 8147§	27	1					
Jaw—rod		NT 6601§	18	1					
Nut—lock—jaw		FNN 204	19	1					
Washer—plain—rod to bell-crank lever		PWZ 104	20	1					
Pin—control rod jaw to venturi		CLZ 0412	21	1					
Washer—plain—pin		PWZ 104	22	1					
Rod assembly—control		NT 7090§		1					Not available; use component parts
Rod—control		NT 6602§	1	1					
Jaw—rod		NT 6601§	2	1					
Nut—lock—jaw		FNN 204	3	1					
Pin—clevis—jaw to cross-shaft		CLZ 0412	4	1					
Washer—plain—pin		PWZ 104	5	1					
Washer—plain—rod to lever		PWZ 104	5	1					
Cross-shaft	**342,**	ATJ 3082§	23	1				51796 on	
Washer—plain—cross-shaft	**10/42**	PWZ 105	7	1					
Rod—control—to injection pump		ATJ 3112§	28	1					
Jaw—rod		NT 6601§	18	1					
Nut—lock—jaw		FNN 204	19	1					
Washer—plain—rod to cross-shaft		PWZ 104	20	1					
Pin—control rod to injection pump		CLZ 0412	21	1					
Washer—plain—pin		PWZ 104	22	1					

§ **Parts peculiar to Tractor only**

See title-page for application

MC

COOLING SYSTEM

	Page	Plate
†RADIATOR LESS SHUTTERS	MC 1·1	C 1
RADIATOR WITH SHUTTERS...	MC 2–MC 4	C 1
RADIATOR SHUTTER CONTROL	MC 6	C 2
WATER HOSES	MC 5	C 1

†Revised Information—Issue 2

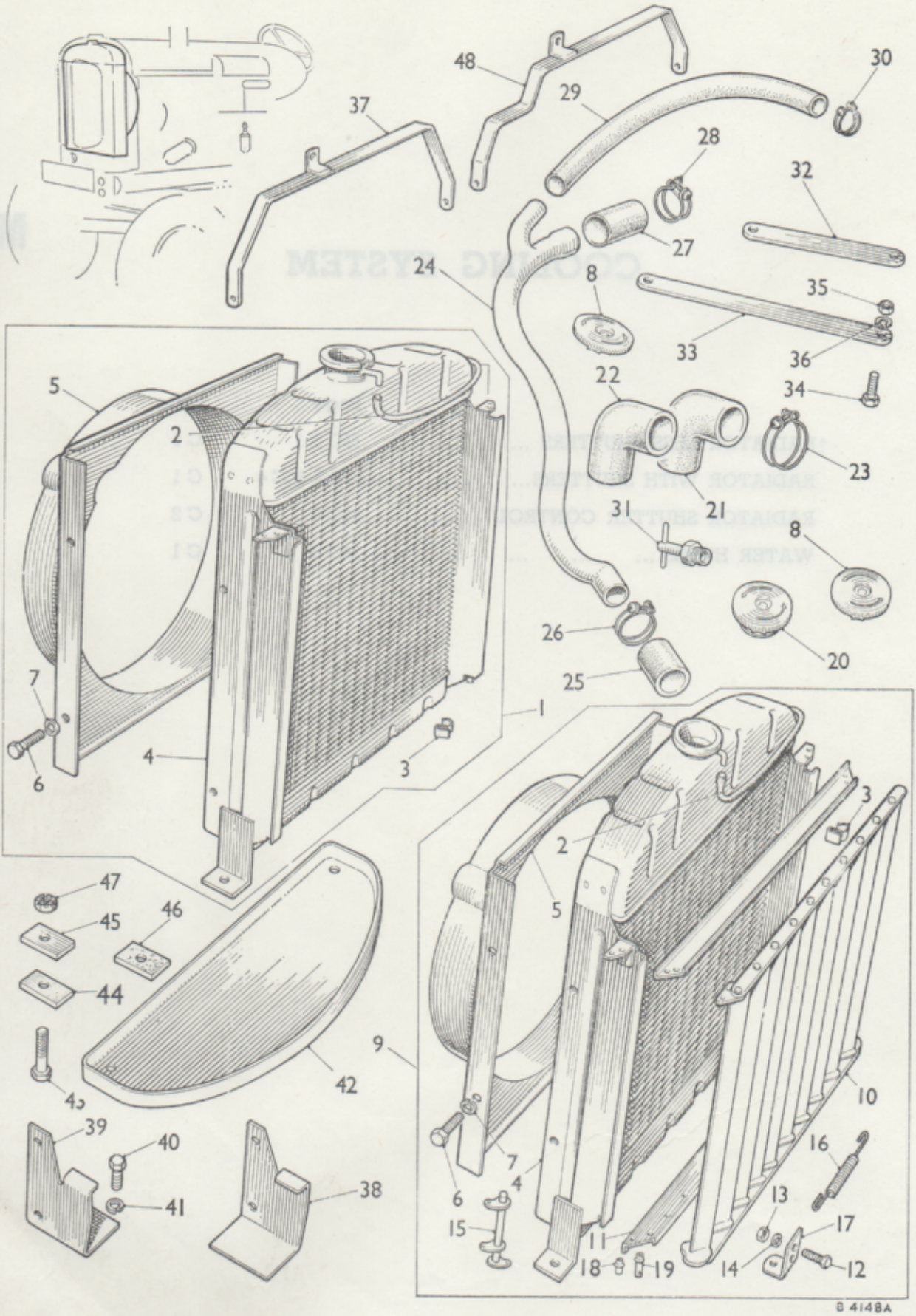
48
30
29
37
28
32
27
24
8
35
33
36
22
34
5
2
23
21
31
8
26
20
25
7
1
4
3
6
3
2
47
45
46
5
44
9
42
43
10
39
40
16
7
4
6
41
38
13
15
17
11
18
19
14
12
B 4148A

DESCRIPTION		Part No.	Illus. No.	Quantity	Stock recommds. DIST. Exp.	Stock recommds. DIST. UK	Stock recommds. D	Change Point	REMARKS
COOLING SYSTEM									
Radiator assemblies (less shutters)	**3DL**	ARJ 15§		1				771–501 to 4318	Part No. change;
								772–501 to 1185	was NT 8248.
									Not available;
									use ARJ 29
	3DL	ARJ 26§		1				771–4319 to 7333 (less 7262, 7263 and 7275 to 7315)	Not available; use ARJ 29
								772–1186 to 2030 (less 2000 to 2015)	
	3DL, 342	ARJ 29§	1	1				3DL–771–7334 on (plus 7262, 7263 and 7275 to 7315)	
Pipe—overflow		ARJ 690§	2	1				772–2031 on (plus 2000 to 2015)	
Clip—pipe		ARA 951	3	2				342–24000 on	
Internal assemblies	**3DL**	ARJ 616§		1				771–501 to 4318	Not available;
								772–501 to 1185	use ARJ 692
	3DL	ARJ 668§		1				771–4319 to 7333 (less 7262, 7263 and 7275 to 7315)	Not available; use ARJ 692
								772–1186 to 2030 (less 2000 to 2015)	
	3DL, 342	ARJ 692§	4	1				3DL–771–7334 on (plus 7262, 7263 and 7275 to 7315)	
								772–2031 on (plus 2000 to 2015)	
								342–24000 on	
Cowl—fan	**3DL**	ARJ 557§		1				771–501 to 7333 (less 7262, 7263 and 7275 to 7315)	Not available; use ARJ 685
								772–501 to 2030 (less 2000 to 2015)	
Cowl—fan	**3DL, 342**	ARJ 685§	5	1				3DL–771–7334 on (plus 7262, 7263 and 7275 to 7315)	
								772–2031 on (plus 2000 to 2015)	
								342–24000 on	
Screw—cowl fixing		HZS 0405	6	4					
Washer—spring—screw		LWZ 204	7	4					
Cap—radiator filler		ARJ 618§	8	1	★	★			

§ **Parts peculiar to Tractor only** **See title-page for application** †**Revised Information**

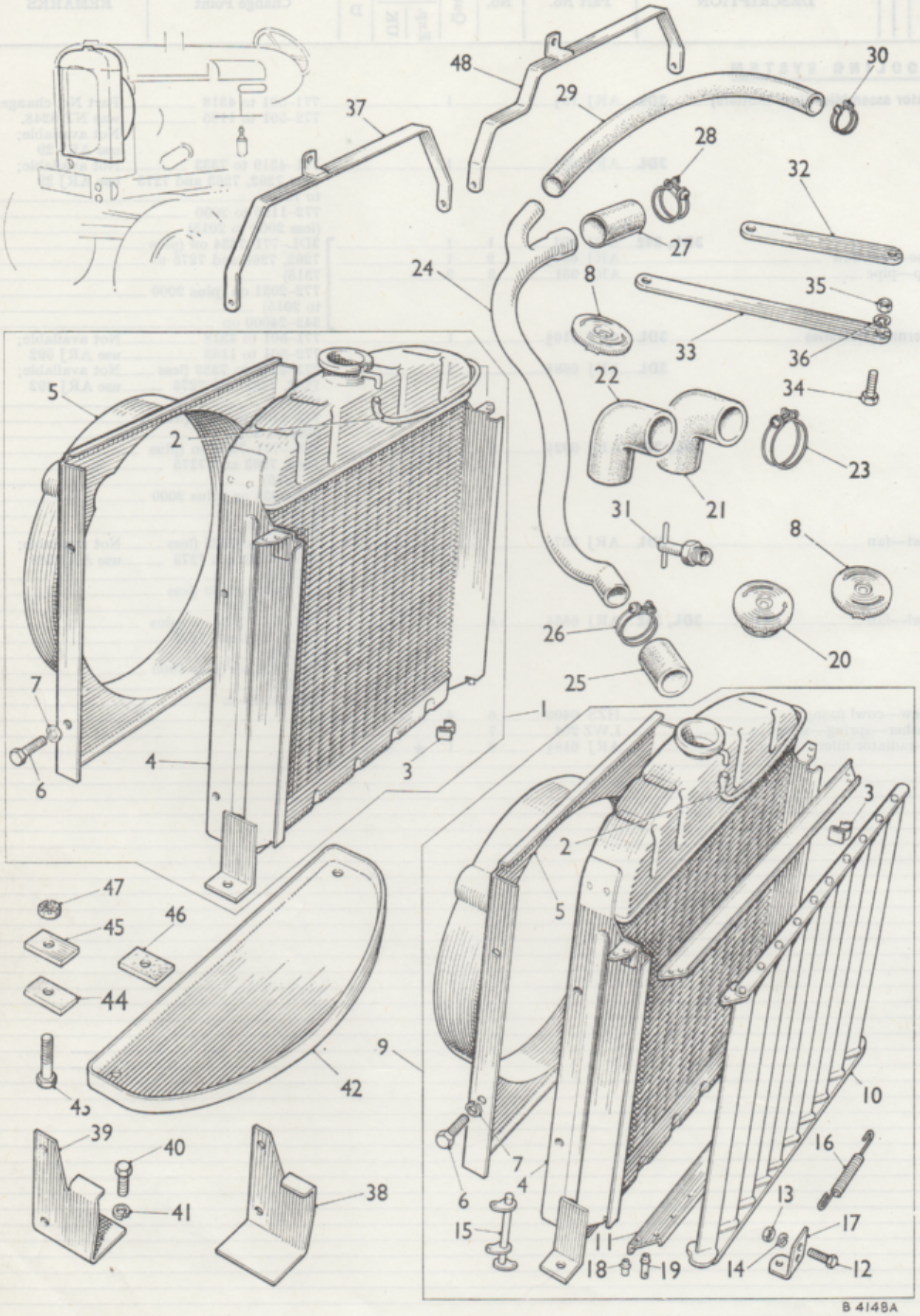
48
30
29
37
28
32
27
24
8
35
33
36
22
34
5
2
23
21
31
8
26
20
25
7
1
4
3
6
3
2
47
5
45
46
44
9
42
10
39
40
16
7
4
6
38
41
13
17
15
11
18
19
14
12
B 4148A

PLATE C 1

DESCRIPTION	Part No.	Illus. No.	Quantity	Stock recommds. DIST. Exp.	Stock recommds. DIST. UK	Stock recommds. D	Change Point	REMARKS
Cooling System—*continued*								
Radiator assemblies (with shutters)								
3DL, 4DM	ARJ 2§		1				4DM–DE1001 on, IDE 10388 on, 787–501 to 10135 792–501 to 2813 3DL–771–501 to 4318 772–501 to 1185	Part No. change; was NT 6945 Not available; use ARJ 30
3DL, 4DM	ARJ 24§		1				4DM–787-10136 to 11720 (less 9855 to 9857, 9866 to 9877, 9896 to 10000, 11690 to 11694, 11697 to 11715) 792–2814 to 10882 (less 4086, 4087, 4094 to 10000) 3DL–771–4319 to 7333 (less 7262, 7263, 7275 to 7315) 772–1186 to 2012 (less 2000 to 2011)	Not available; use ARJ 30
3DL, 4DM, 342, 460, 10/42, 10/60	ARJ 30§	9	1				4DM–787–11721 on (plus 9855 to 9857, 9866 to 9877, 9896 to 10000, 11690 to 11694, 11697 to 11715) 792–10883 on (plus 4086 to 4087, 4094 to 10000) 3DL–771–7334 on (plus 7262 to 7263, 7275 to 7315) 772–2031 on (plus 2000 to 2015)	
Pipe—overflow	ARJ 690§	2	1				460–24000 on 342–24000 on 10/42–24000 on 10/60–24000 on	
Clip—pipe	ARA 951	3	2					

§ **Parts peculiar to Tractor only**

See title-page for application

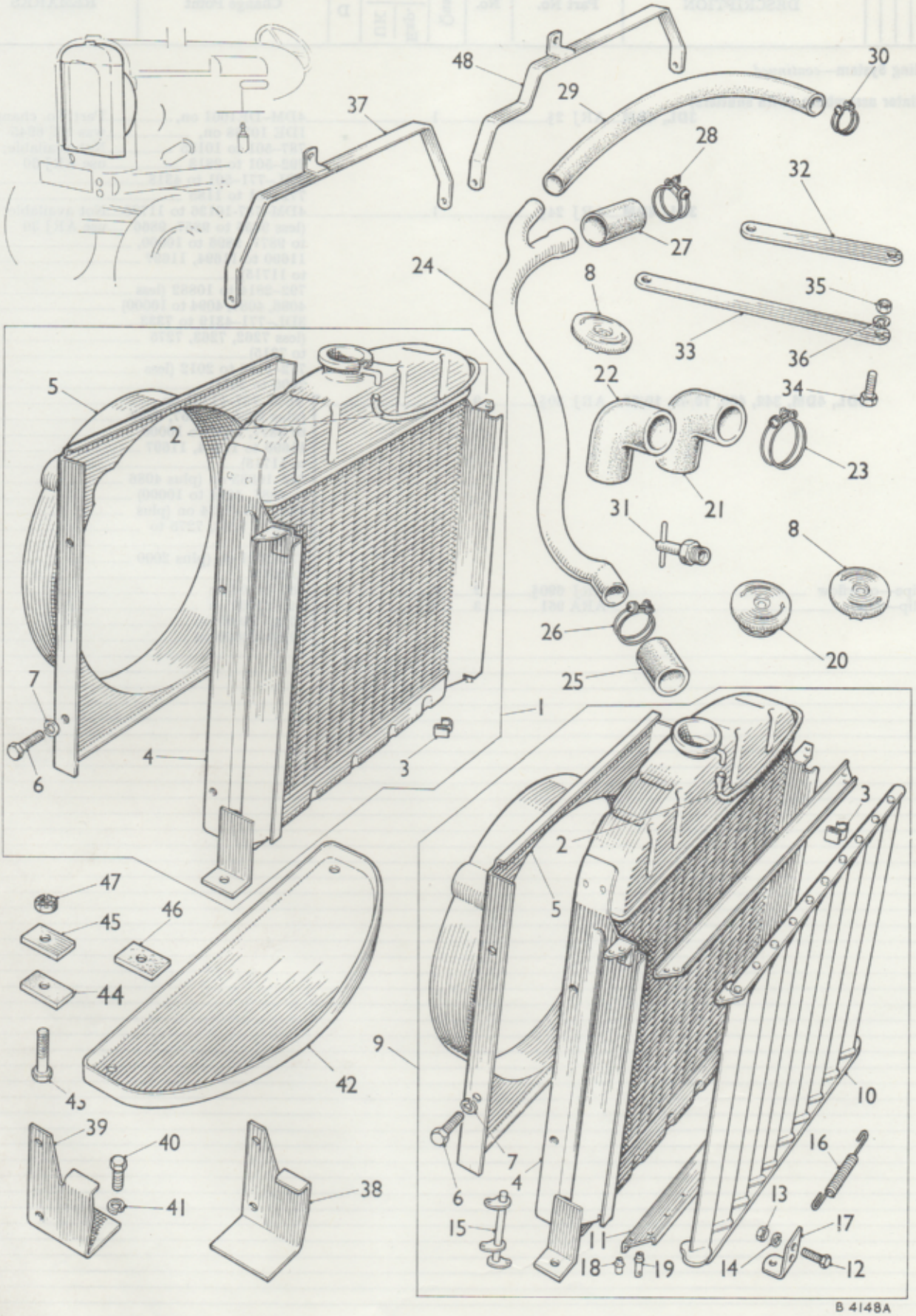
48
30
29
37
28
32
27
24
8
35
33
36
22
34
5
2
23
21
31
8
26
20
25
7
1
4
3
6
3
2
47
5
45
46
44
9
42
43
10
39
40
16
7
4
6
38
41
13
15
17
11
18
19
14
12
B 4148A

PLATE C 1

DESCRIPTION	Part No.	Illus. No.	Quantity	Stock recommds. DIST. Exp.	Stock recommds. DIST. UK	Stock recommds. D	Change Point	REMARKS
Cooling System—*continued*								
Internal assemblies	**4DM, 3DL** ARJ 556§		1				4DM–DE1001 on IDE10388 on 787–501 to 10135 792–501 to 2813 3DL–771–501 to 4318 772–501 to 1185	
	4DM, 3DL ARJ 668§		1				4DM–787–10136 to 11720 (less 9855 to 9857, 9866 to 9877, 9896 to 10000, 11690 to 11694, 11697 to 11715) 792–2814 to 10882 (less 4086, 4087, 4094 to 10000) 3DL–771–4319 to 7333 (less 7262, 7263, 7275 to 7315) 772–1186 to 2012 (less 2000 to 2011)	Not available; use ARJ 692
	4DM, 3DL, 460, 342, 10/60, 10/42 ARJ 692§	4	1				4DM–787–11721 on (plus 9855 to 9857, 9866 to 9877, 9896 to 10000, 11690 to 11694, 11697 to 11715) 792–10883 on (plus 4086 to 4087, 4094 to 10000) 3DL–771–7334 on (plus 7262 to 7263, 7275 to 7315) 772–2031 on (plus 2000 to 2015) 460–24000 on 342–24000 on	
Cowl—fan	**4DM, 3DL** ARJ 557§		1				4DM–DE1001 on IDE10388 on 787–501 to 11720 (less 9855 to 9857, 9866 to 9877, 9896 to 10000, 11690 to 11694, 11697 to 11715) 792–501 to 10882 (less 4086, 4087, 4094 to 10000) 3DL–771–501 to 7333 (less 7262, 7263, 7275 to 7315) 772–501 to 2012 (less 2000 to 2011)	Not available; use ARJ 685

§ **Parts peculiar to Tractor only**

See title-page for application

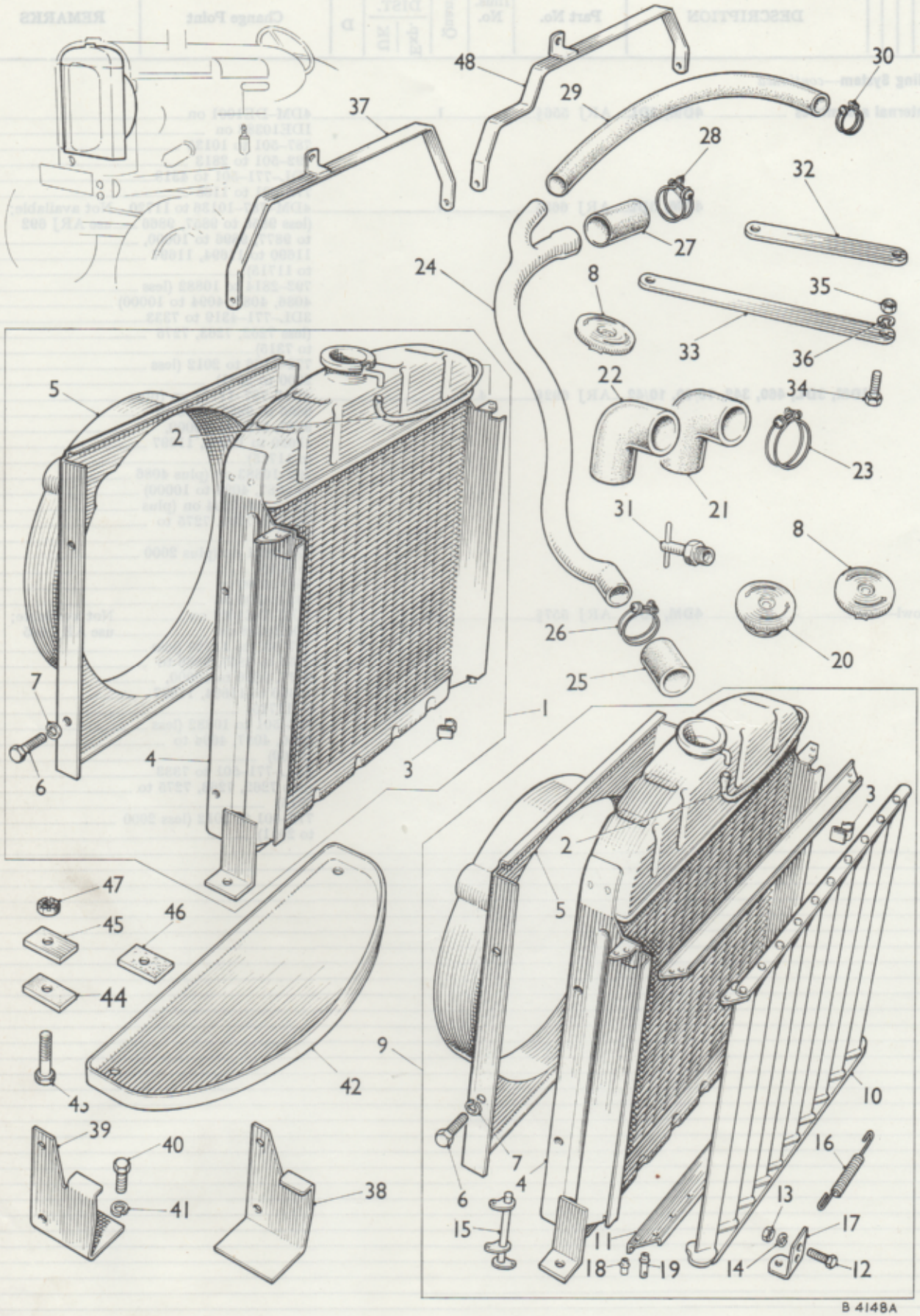
48
30
29
37
28
32
27
24
8
35
33
36
22
34
5
2
23
21
31
8
26
20
25
7
1
4
3
6
3
2
47
5
45
46
44
9
42
10
39
40
16
7
4
38
41
6
13
15
17
11
18
19
14
12
B 4148A

PLATE C 1

DESCRIPTION	Part No.	Illus. No.	Quantity	Stock recommds. DIST. Exp.	Stock recommds. DIST. UK	Stock recommds. D	Change Point	REMARKS
Cooling System—*continued*								
Cowl—fan								
3DL, 4DM, 342, 460, 10/42, 10/60	ARJ 685§	5	1				4DM–877–11721 on (plus 9855 to 9857, 9866 to 9877, 9896 to 10000, 11690 to 11694, 11697 to 11715) 792–10883 on (plus 4086, 4087, 4094 to 10000) 3DL–771–7334 on (plus 7262, 7263, 7275 to 7315) 772–2031 on (plus 2000 to 2015) 460–24000 on 342–24000 on 10/60–24000 on 10/42–24000 on	
Screw—cowl fixing	HNS 0405	6	4					
Washer—spring—screw	LWZ 204	7	4					
Shutter assembly	ARJ 514§	10	1					
Frame—shutter—top	ARJ 501§		1					Not available; use ARJ 502
Frame—shutter—bottom	ARJ 502§	11	1					
Screw—fixing	PMZ 0308	12	9					
Nut—screw	FNZ 103	13	9					
Washer—spring—nut	LWZ 203	14	9					
Lever—shutter	ARJ 519§	15	1					
Spring—shutter return	ARJ 506§	16	1					
Bracket—shutter support	ARJ 515§	17	1					
Pin—shutter—plain	ARJ 507§	18	28					
Pin—shutter—drilled	ARJ 508§	19	12					
Cap—radiator filler	ARJ 618§	8	1	★	★			
Cap—radiator filler—pressure type	ATJ 2012§	20	1	★	★			Optional alternative
Hose—radiator top	NT 6707§	21	1	★	★		4DM–DE1001 on IDE10388 on 787–501 to 11720 (less 9855 to 9857, 9866 to 9877, 9896 to 10000, 11690 to 11694, 11697 to 11715) 792–501 to 10882 (less 4086, 4087, 4094 to 10000) 3DL–771–501 to 7333 (less 7262, 7263, 7275 to 7315) 772–501 to 2012 (less 20000 to 2011)	
Hose—radiator top	ATJ 74§	22	1	★	★		4DM–787–11721 on (plus 9855 to 9857, 9866 to 9877, 9896 to 10000, 11690 to 11694, 11697 to 11715) 792–10883 on (plus 4086, 4087, 4094 to 10000) 3DL–771–7334 on (plus 7262, 7263, 7275 to 7315) 772–2031 on (plus 2000 to 2015) 342–24000 on 460–24000 on 10/42–24000 on 10/60–24000 on	

§ **Parts peculiar to Tractor only** **See title-page for application**

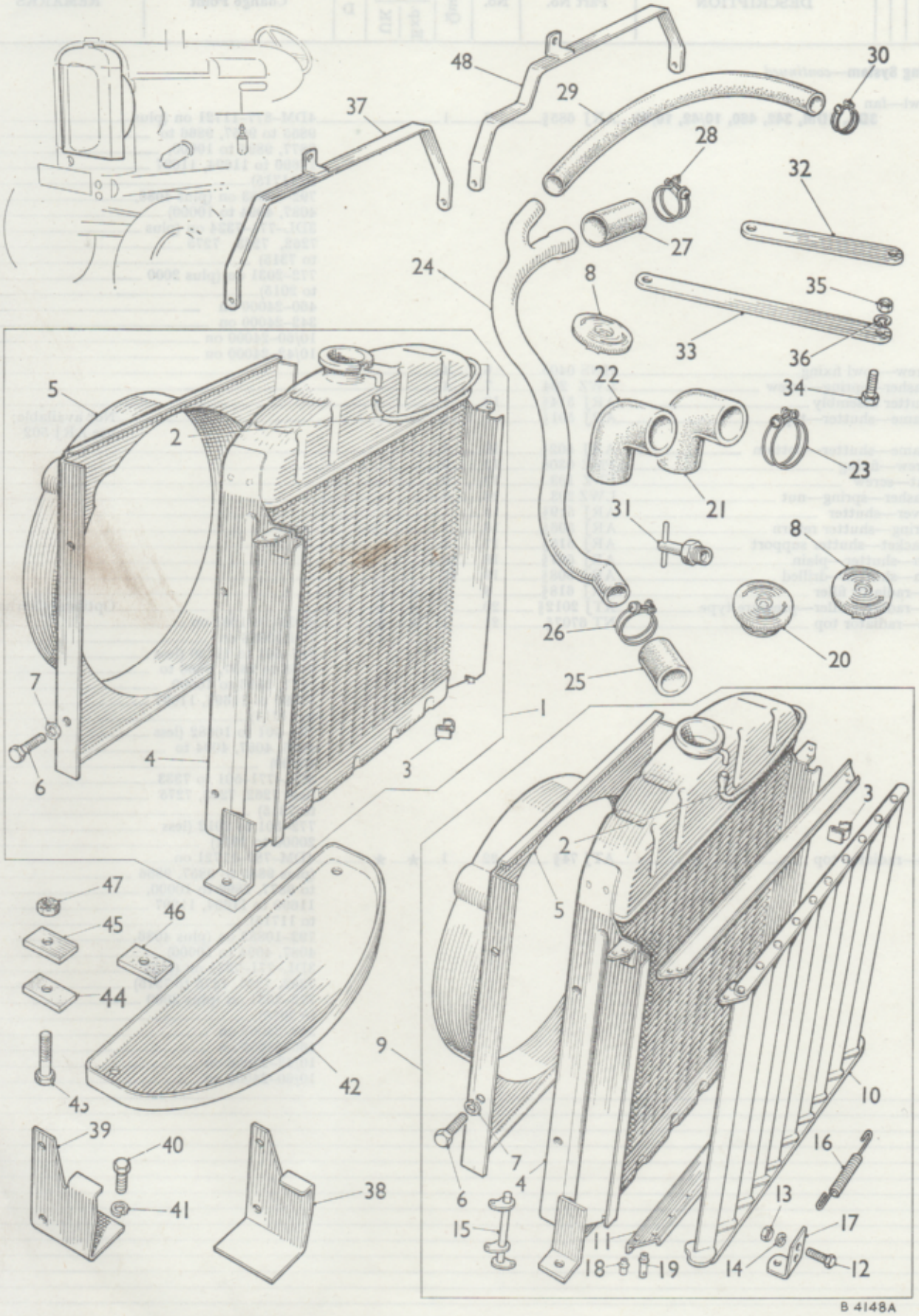
48
30
29
37
28
32
27
24
8
35
33
36
22
34
5
2
23
21
31
8
26
20
25
7
1
4
3
6
3
2
5
47
46
45
44
9
42
43
10
39
40
16
7
4
6
38
41
13
17
15
11
18
19
14
12
B 4148A

PLATE C 1

DESCRIPTION	Part No.	Illus. No.	Quantity	Stock recommds. DIST. Exp.	Stock recommds. DIST. UK	Stock recommds. D	Change Point	REMARKS
Cooling System—*continued*								
Clip—top radiator hose	HCS 1622	23	2					Part No. change; was NT 6251
Pipe—bottom—engine end	NT 7396§	24	1					
Hose—connection—bottom	NT 8178§	25	1	★	★			
Clip—hose	HCS 1217	26	2					Part No. change; was NT 6249
Hose—connection	NT 6721§	27	1	★	★			
Clip—hose	HCS 1622	28	2					Part No. change; was NT 6722
Hose—connection—by-pass pipe	NT 6961§	29	1	★	★			
Clip—hose	HCS 0913	30	2					Part No. change; was NT 6962
Tap—radiator drain	ATJ 3034§		1					Not available; use 13H 1526
Tap—radiator drain	13H 1526	31	1					
Stay—radiator top **3DL**	NT 8297§	32	1				4DM–DE1001 on	
Stay—radiator top **4DM**	NT 6967§	33	1				IDE10388 on	
Screw—stay to radiator	HZS 0607	34	2				787–501 to 11720 (less 9855 to 9857, 9866 to 9877, 9896 to 10000, 11690 to 11694, 11697 to 11715)	
Nut—screw	FNZ 106	35	2					
Washer—spring—nut	LWZ 206	36	2					
							792–501 to 10882 (less 4086, 4087, 4094 to 10000)	
							3DL–771–501 to 7333 (less 7262, 7263, 7275 to 7315)	
							772–501 to 2012 (less 2000 to 2011)	
Steady—radiator top	ATJ 75§	37	1				4DM–787–11721 on (plus 9855 to 9857, 9866 to 9877, 9896 to 10000, 11690 to 11694, 11697 to 11715)	
							792–10883 on (plus 4086, 4087, 4094 to 10000)	
							3DL–771–7334 on (plus 7262, 7263, 7275 to 7315)	
							772–2031 on (plus 2000 to 2015)	
							342–24000 on	
							460–24000 on	
							10/42–57420 on	
							10/60–57420 on	
Steady—radiator top **10/42**	†ATJ 4202§	48	1					When power assisted steering is fitted
Bracket—radiator support—RH	NT 5856§	39	1					
Bracket—radiator support—LH	NT 5855§	38	1					
Screw—support bracket fixing	HZS 0608	40	6					
Washer—spring—screw	LWZ 206	41	6					
Excluder—chaff	NT 5885§	42	1					
Bolt—radiator to support bracket	ATJ 1010§	43	2					
Pad—top (cork)	NT 5362§	44	2					
Washer—rectangular	NT 1426§	45	2					
Pad—bottom (cork)	NT 5361§	46	2					
Nut—bolt	†FNZ 306	47	2					Correction; was FNN 306

§ **Parts peculiar to Tractor only** **See title-page for application** †**Revised Information—Issue 2**

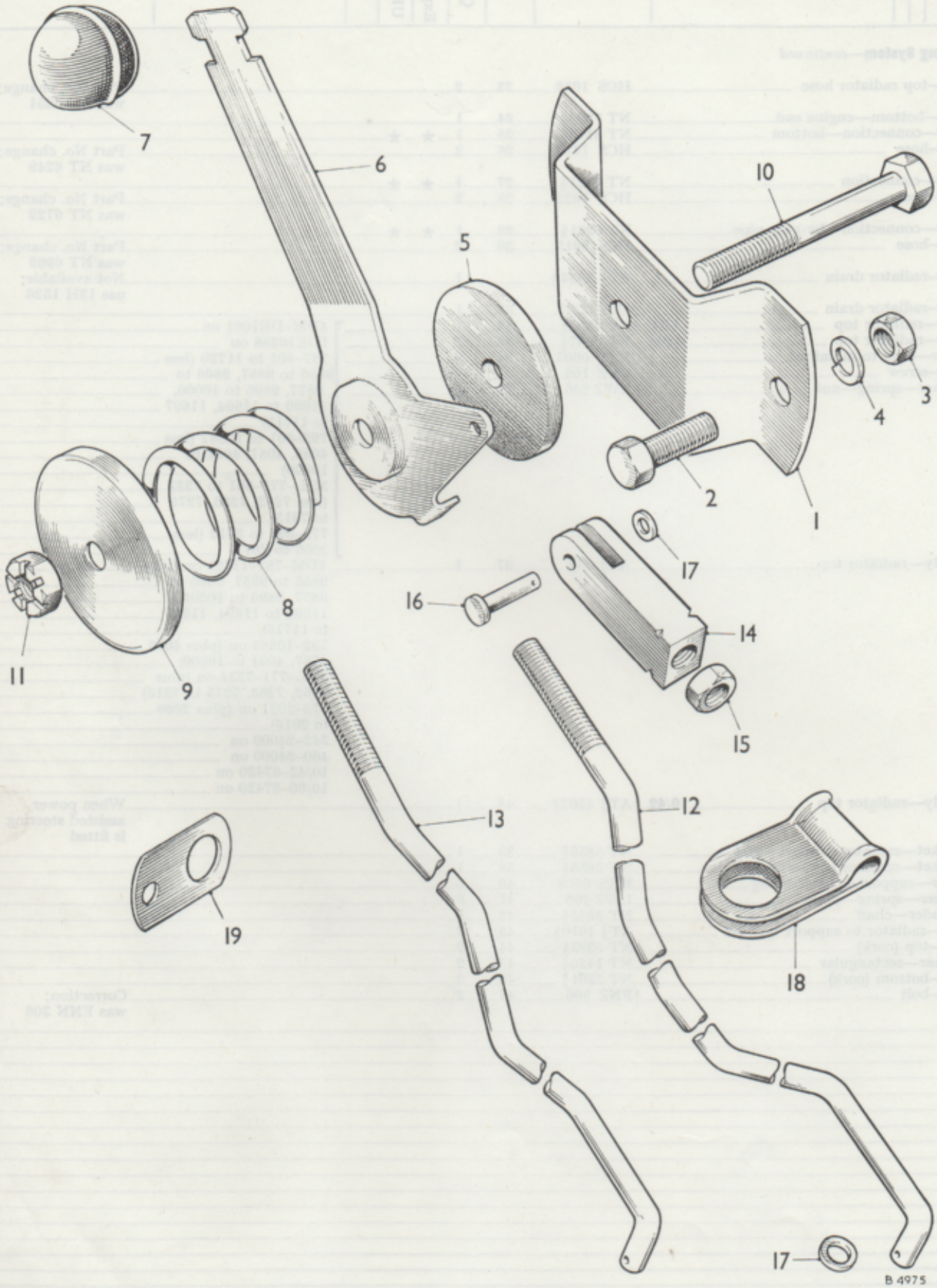

To face page MC 6

DESCRIPTION	Part No.	Illus. No.	Quantity	Stock recommds. DIST. Exp. / UK	Stock recommds. D	Change Point	REMARKS
Cooling System—*continued*							
RADIATOR SHUTTER CONTROL							
Bracket—operating lever	NT 1815§	1	1				
Screw—bracket to side panel	HNS 0505	2	2				
Nut—screw	FNN 105	3	2				
Washer—spring—nut	LWN 205	4	2				
Disc—friction	NT 1822§	5	1				
Lever—operating	NT 3590§	6	1				
Knob—lever	NT 1625§	7	1				
Spring—lever	NT 3162§	8	1				
Cup—spring locating	NT 2455§	9	1				
Bolt—lever to bracket	ATJ 1011§	10	1				
Nut—bolt	FNZ 305	11	1				
Rods—shutter control **4DM**	NT 6950§	12	1			DE1001 to 10387	
4DM	NT 7431§		1			4DM–IDE10388 on	Not available; use ATJ 3049
						787–501 on	
						792–501 on	
4DM, 460	ATJ 3049§	12	1			460–24000 on	
10/60	ATJ 3148§	12	1			10/60–57420 on	
3DL	NT 8317§		1			3DL–771–501 on	Not available; use ATJ 3050
						772–501 on	
3DL, 342	ATJ 3050§	13	1			342–24000 on	
10/42	ATJ 3147§	13	1			10/42–57420 on	
Jaw—control rod	NT 5673§	14	1				
Nut—jaw	FNZ 204	15	1				
Pin—jaw	NT 3035§	16	1				
Washer—plain—rod	NT 6502§		1				Not available; use ATJ 1048
Washer—plain—rod	ATJ 1048§	17	1				
Clip—control rod steady	NT 6951§	18	1			4DM–DE1001 on	
						IDE10388 on	
						787-501 to 10401 (less	
						6668 to 6727, 6729 to	
						10000, 10373 to 10400)	
						792–501 to 3052 (less	
						1980 to 1984, 2011 to	
						2100, 3034 to 3043, 3046	
						to 3048)	
						3DL–771–501 to 7848	
						772–501 to 1339 (less	
						1335 to 1338)	
Clip—control rod steady	ATJ 3039§	19				4DM–787–10402 on	
						(plus 6668 to 6727, 6729	
						to 10000, 10373 to 10400)	
						792–3053 on (plus 1980	
						to 1984, 2011 to 2100,	
						3034 to 3043, 3046 to	
						3048)	
						3DL–772–1340 on (plus	
						1335 to 1338)	
						771–7849 on	
						342–24000 on	
						460–24000 on	
						10/42–24000 on	
						10/60–24000 on	

§ **Parts peculiar to Tractor only** **See title-page for application**

FUEL SYSTEM

MD

	Page	Plate
AIR CLEANER (3DL, 342, 10/42)	MD 5	D 5
AIR CLEANER (4DM, 460, 10/60)	MD 4	D 4
FUEL BOWL FILTER	MD 3	D 3
FUEL PIPES	MD 2	D 2
FUEL TANK	MD 1	D 1

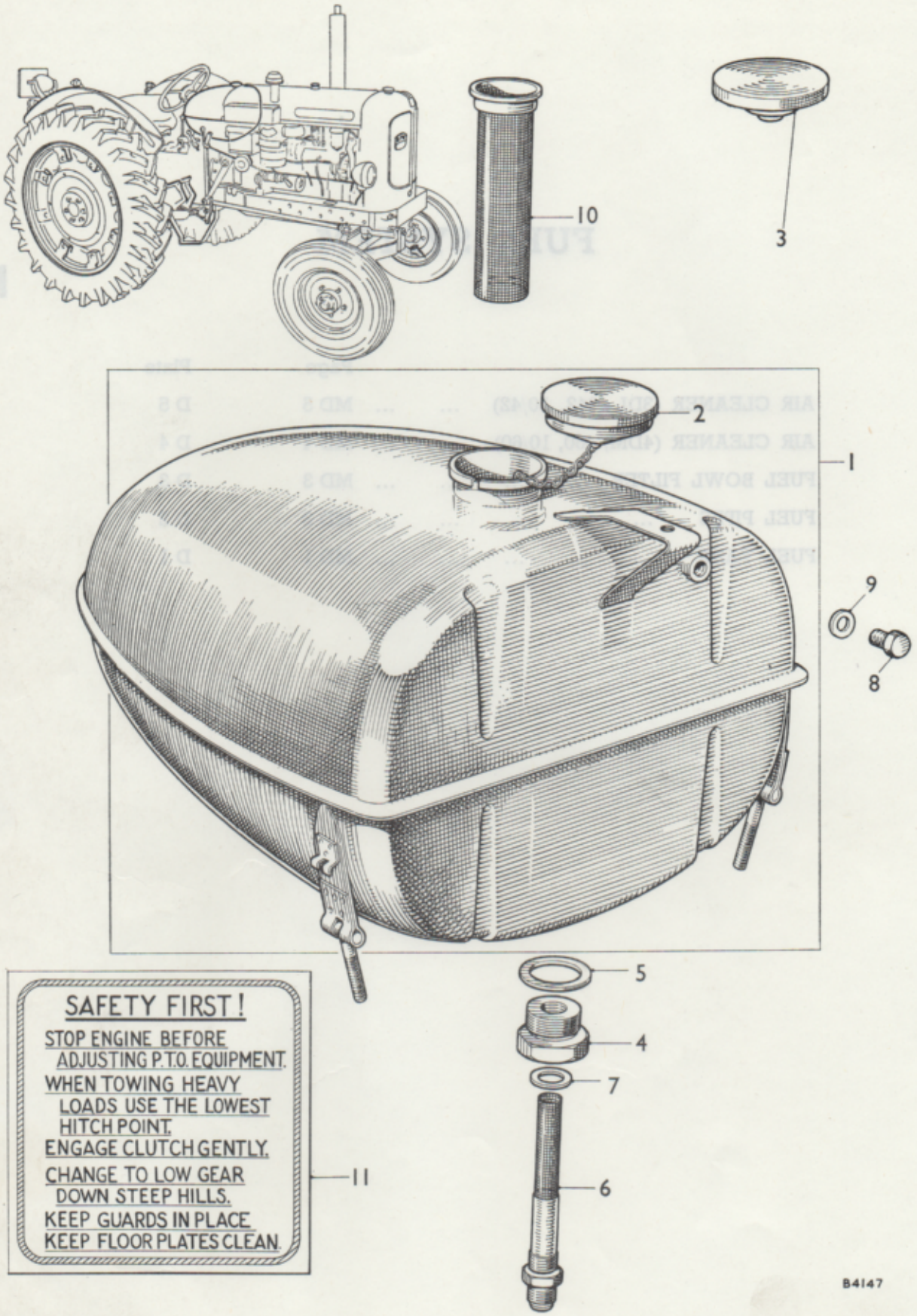

To face page MD 1

DESCRIPTION		Part No.	Illus. No.	Quantity	Stock recommds. DIST. Exp.	Stock recommds. DIST. UK	Stock recommds. D	Change Point	REMARKS
FUEL SYSTEM									
FUEL TANK									
Tanks—main fuel	**4DM**	NT 4982§		1				DE1001 to 10387	Not available;
								IDE10388 to 16098	use ATJ 3038 with 2 off FNZ 107, 2 off FNN 406, 1 off PMZ 0512, 1 off ATJ 3037 and 1 off ATJ 3035
	4DM, 3DL	ARJ 17§		1				4DM–IDE16099 on	Part No. change;
								787–501 to 12045	was NT 8250.
								(less 6531 to 10000)	Not available;
								792–501 to 2961	use ATJ 3038 with
								(less 1914 to 2100)	1 off ATJ 3037,
								3DL–771–501 to 4748	1 off ATJ 3035
								772–501 to 1309	
	4DM, 3DL, 460, 342, 10/60, 10/42	ATJ 3038§	1	1				4DM–787–10246 (plus 6531 to 10000)	
								792–2962 on (plus 1914 to 2100)	
								3DL–771–4749 on	
								772–1310 on	
								342–24000 on	
								460–24000 on	
								10/42–24000 on	
								10/60–24000 on	
Caps—filler	**4DM**	NT 4668§	2	1				DE1001 to 10387	
								IDE10388 to 16098	
	4DM, 3DL, 460, 342	ARJ 602§		1				4DM–IDE16099 on	Not available;
								787–501 on	use ATJ 3092
								792–501 on	
								3DL–771–501 on	
								772–501 on	
								460–24000 to 43925	
								342–24000 to 43925	
	342, 460, 10/42, 10/60	ATJ 3092§	3	1	★	★		342–43926 on	
								460–43926 on	
								10/42–43926 on	
								10/60–43926 on	
Plug—drain		NT 1956§	4	1				4DM–DE1001 on	
Washer—plain—plug	**4DM, 3DL**	NT 3018§	5	1				IDE10388 on	
Union and pencil filter		NT 4990§	6	1	★	★		787–501 to 10245	
								(less 6531 to 10000)	
								792–501 to 2961	
								(less 1914 to 2100)	
								3DL–771–501 to 4748	
								772–501 to 1309	
Union and pencil filter									
	4DM, 3DL, 460, 342, 10/60, 10/42	ATJ 3037§	6	1	★	★		4DM–787–10246 on (plus 6531 to 10000)	
								792–2962 on (plus 1914 to 2100)	
								3DL–771–4749 on	
								772–1310 on	
								460–24000 on	
								342–24000 on	
								10/60–24000 on	
								10/42–24000 on	
Washer—plain—union		NT 3017§	7	1					
Plug—fuel tank—upper		ATJ 9346§	8	1					
Washer—plain—plug		ATJ 9348§	9	1					
Filter—fuel tank	**4DM**	NT 5429§	10	1				DE1001 to 10387	
								IDE10388 to 16098	
Transfer—safety first instruction		ATJ 8275§	11	1					

§ **Parts peculiar to Tractor only**

See title-page for application

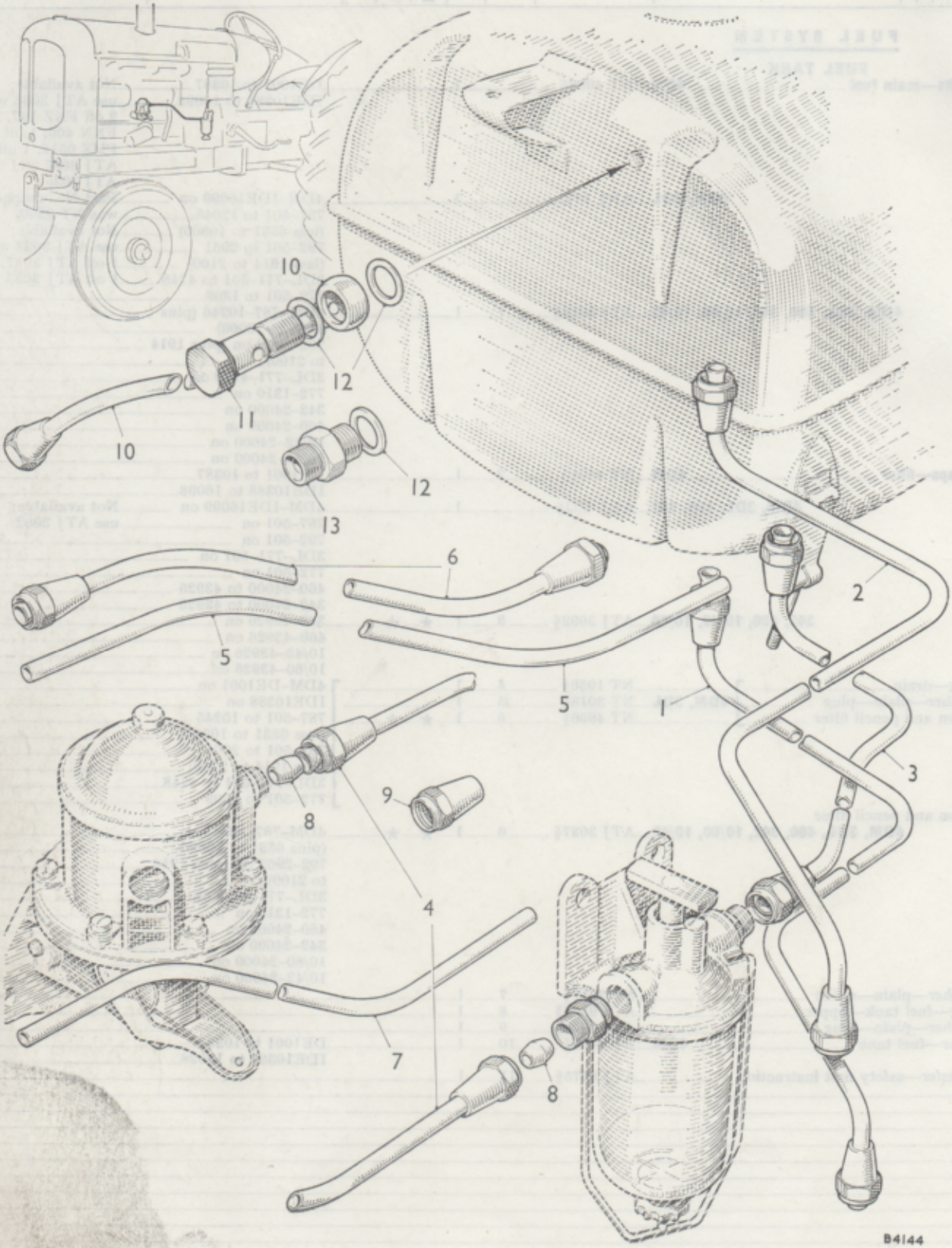

To face page MD 2

DESCRIPTION	Part No.	Illus. No.	Quantity	Stock recommds. DIST. Exp.	Stock recommds. DIST. UK	Stock recommds. D	Change Point	REMARKS
FUEL PIPING								
Pipes—fuel								
Fuel tank to bowl filter	NT 6243§	1	1				4DM–DE1001 on IDE10388 on 787–501 to 10245 (less 6531 to 10000) 792–501 to 2961 (less 1914 to 2100) 3DL–771–501 to 4748 772–501 to 1309	
Fuel tank to bowl filter	ATJ 3035§	2	1				4DM–787–12046 on (plus 6531 to 10000) 792–2962 on (plus 1914 to 2100) 3DL–771–4749 on 772–1310 on 460–24000 to 52920 342–24000 to 52920	
Fuel tank to bowl filter	ATJ 3098§	3	1				460–52921 on 342–52921 on 10/60–52921 on 10/42–52921 on	
Bowl filter to lift pump **4DM, 460**	NT 6956§	4	1				4DM–DE1001 on IDE10388 on 787–501 on 792–501 on 460–24000 to 52920	
Bowl filter to lift pump **460, 10/60**	ATJ 3101§	5	1				52921 on	
Bowl filter to lift pump **3DL, 342**	NT 8279§	6	1				3DL–771–501 on 772–501 on 342–24000 to 52920	
Bowl filter to lift pump **342, 10/42**	ATJ 3100§	7	1				52921 on	
Olive—bowl filter to lift pump pipe	13H 1904	8	2				342–52921 on 460–52921 on 10/42–52921 on 10/60–52921 on	
Tubing nut—bowl filter to lift pump pipe	13H 1905	9	2					
Pipe—return—spill-off to fuel tank	NT 6958§	10	1				4DM–DE1001 on IDE10388 on 787–501 to 23264 (less 13430 to 20000) 792–501 to 12501 (less 5724 to 10000) 3DL–771–501 to 9914 772–501 to 3042	
Bolt—banjo—return pipe	NT 4302§	11	1					
Washer—bolt (copper)	7H 106		1					Not available; use 11B 487
Washer—bolt (copper)	11B 487	12	2					
Union—spill-off pipe to fuel tank	ATJ 3048§	13	1				4DM–787–23265 on (plus 13434 to 20000) 792–12502 on (plus 5724 to 10000) 3DL–771–9915 on 772–3043 on 460–24000 on 342–24000 on 10/60–24000 on 10/42–24000 on	
Washer—union (copper)	11B 487	12	1					

§ **Parts peculiar to Tractor only**

See title-page for application

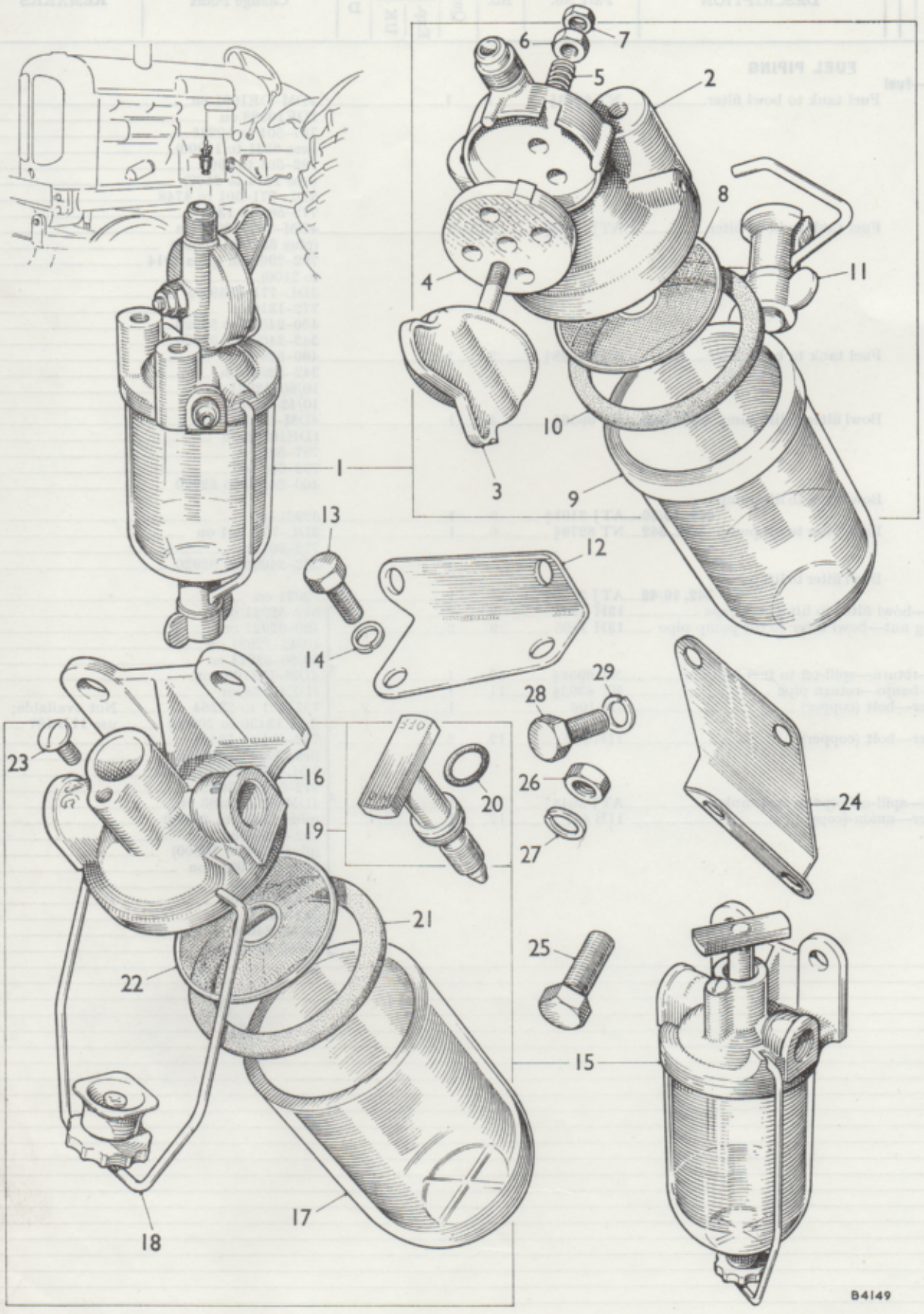

To face page MD 3

FUEL FILTER

DESCRIPTION	Part No.	Illus. No.	Quantity	Stock recommds. DIST. Exp.	Stock recommds. DIST. UK	Stock recommds. D	Change Point	REMARKS
Filter—bowl type	NT 6024§	1	1					
Cover—filter	7H 1955	2	1					
Tap	7H 1954	3	1					
Seat—tap (cork)	17H 172§	4	1				4DM–DE1001 on	
Spring—tap	17H 173§	5	1				IDE10388 on	
Nut—tap—large	7H 1957	6	1				787–501 on	
Nut—tap—small	7H 1956	7	1				792–501 on	
Gauze	17H 174§	8	1				3DL–771–501 on	WSE use 27H 2272
Bowl (glass)	17H 176§	9	1				772–501 on	
Washer (rubber)	17H 175§	10	1				460–24000 to 52920	
Strap—bowl retaining	17H 177§	11	1				342–24000 to 52920	
Bracket—bowl filter	NT 6213§	12	1					
Screw—bracket to bowl filter	HZS 0404	13	2					
Washer—spring—screw	LWN 204	14	2					
Filter—bowl type	ATJ 3097§	15	1					
Cover—filter	27H 2267§	16	1					
Bowl (glass)	27H 2268§	17	1					
Bail	27H 2269§	18	1					
Valve assembly	27H 2270§	19	1					WSE use 27H 9272
Valve assembly	†27H 9272§	19	1					
Ring (Neoprene)	27H 2271§	20	1				460–52921 on	
Washer (rubber)	27H 1330§	21	1				342–52921 on	
Screen—filter	27H 2272§	22	1				10/42–57420 on	
Screw	27H 2273§	23	1				10/60–57420 on	
Bracket—bowl filter	ATJ 3096§	24	1					
Screw—bracket to bowl filter	HZS 0505	25	2					
Nut—screw	FNZ 105	26	2					
Washer—spring—nut	LWN 205	27	2					
Screw—bracket to flywheel housing	HZS 0506	28	2					
Washer—spring—screw	LWN 205	29	2					

§ Parts peculiar to Tractor only

See title-page for application

†Revised Information. Issue 2

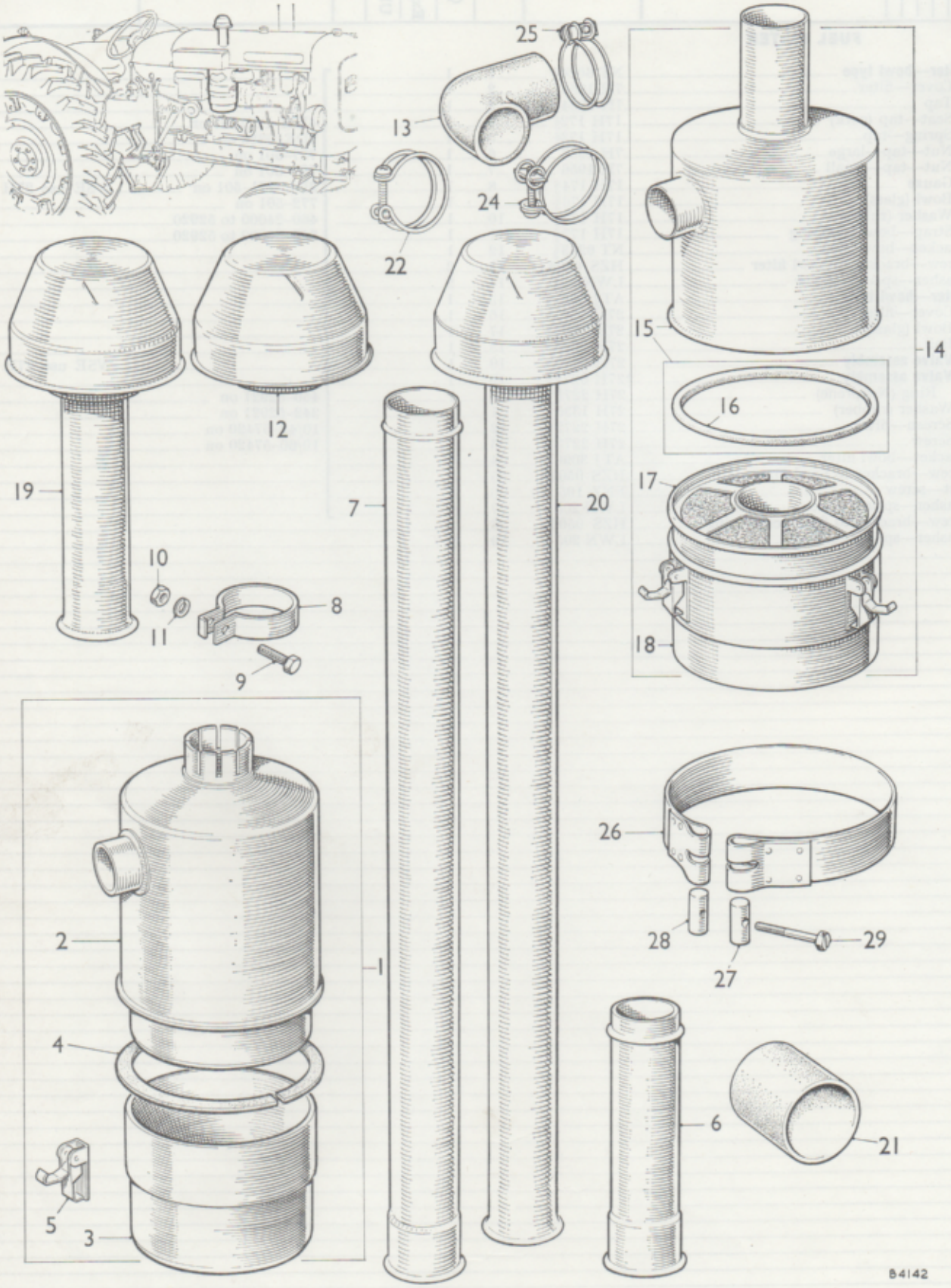
25
13
24
22
15
14
16
12
19
7
20
17
10
11
8
18
9
2
1
26
28
29
27
4
6
21
5
3
B4142

DESCRIPTION		Part No.	Illus. No.	Quantity	Stock recommds. DIST. Exp.	Stock recommds. DIST. UK	Stock recommds. D	Change Point	REMARKS
AIR CLEANER									
Cleaner—air		NT 6445§	1	1					
Cover and element		17H 182§	2	1					
Container—oil		17H 180§	3	1					
Gasket		17H 181	4	1					
Retainer—bowl		17H 199	5	3					
Extension—air cleaner—short		NT 6894§	6	1					
Extension—air cleaner—long	**4DM**	NT 6898§	7	1					Optional alternative
Clip—extension to air cleaner		NT 6732§	8	1					
Screw—clip		HNS 0507	9	1					
Nut—screw		FNN 105	10	1					
Washer—spring—nut		LWN 205	11	1					
Pre-cleaner		NT 6491§	12	1					
Hose—elbow—air cleaner		NT 6690§	13	1					
Cleaner—air		ATJ 3058§	14	1					
Element assembly		37H 1208§	15	1					
Gasket		17H 181	16	1					
Element—detachable		37H 1209§	17	1					
Container—oil		27H 1338	18	1					
Pre-cleaner (with short extension pipe)	**460, 10/60**	ATJ 3059§	19	1					
Pre-cleaner (with long extension pipe)		ATJ 3060§	20	1					Optional alternative
Hose—sealing—air cleaner extension		ATJ 3007§	21	1					
Clip—hose		NT 6464§	22	2					
Hose—elbow—air cleaner		ATJ 3061§	13	1					
Clip—hose		HCS 1622	24	1					
Clip—hose	**4DM,**	HCS 2228	25	1					
Strap—air cleaner retaining	**460,**	NT 5046§	26	1					
Pin—strap—plain	**10/60**	NT 3630§	27	1					
Pin—strap—screwed		NT 5960§	28	1					
Screw—pin		PMZ 0540	29	1					

§ **Parts peculiar to Tractor only** **See title-page for application**

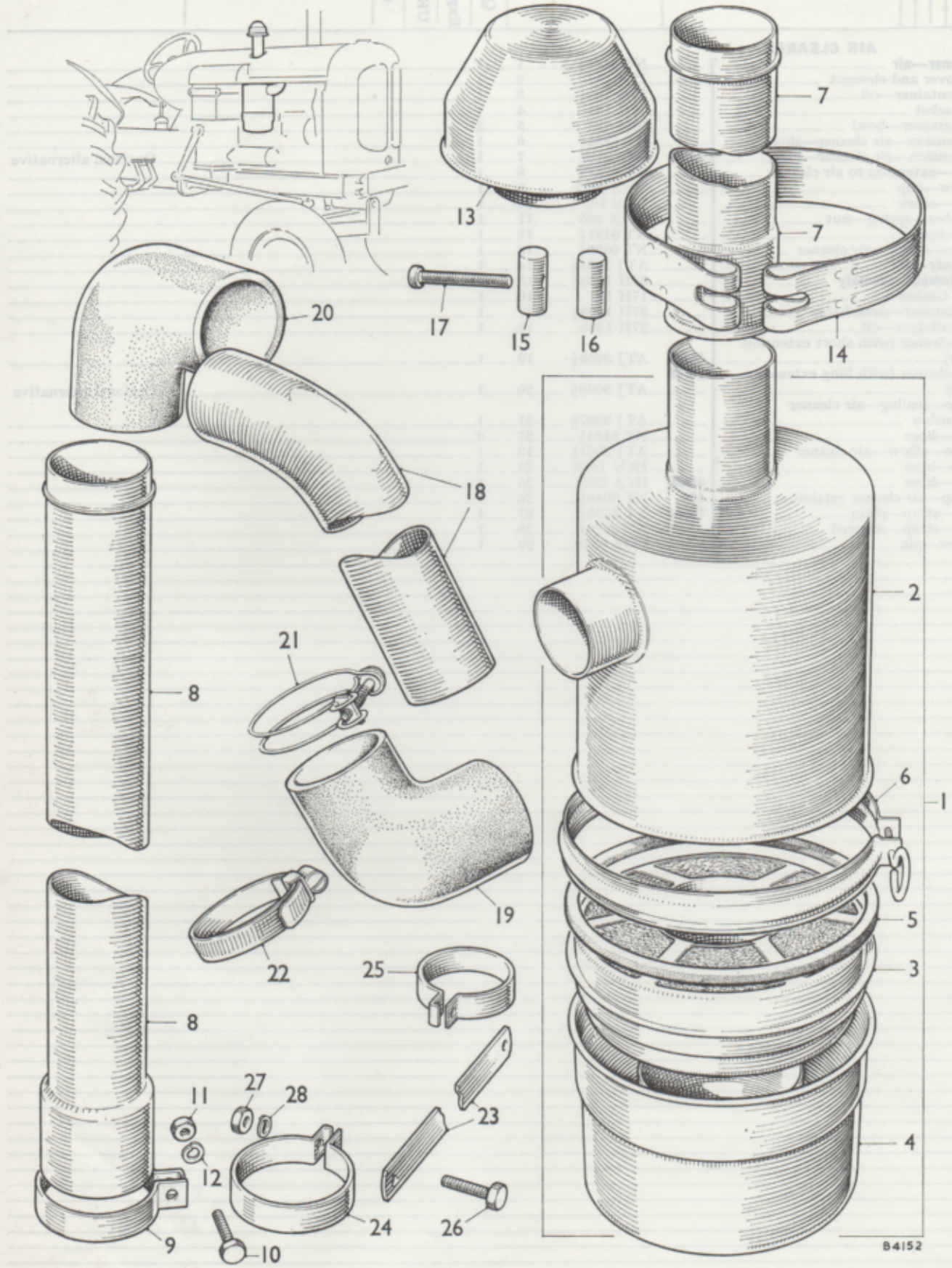

To face page MD 5

Air Cleaner—*continued*

DESCRIPTION		Part No.	Illus. No.	Quantity	Stock recommds. DIST. Exp.	Stock recommds. DIST. UK	Stock recommds. D	Change Point	REMARKS
Cleaner—air		NT 8111§	1	1					
Cover and upper element		17H 1259§	2	1				3DL–771–501 on	
Element—lower	**3DL,**	17H 1260§	3	1				772–501 on	
Container—oil	**342**	17H 1257§	4	1				342–24000 to 51795	
Gasket		17H 1261§	5	1					
Clamp and screw		17H 1258§	6	1					
Cleaner—air		ATJ 3106§	1	1					
Cover and upper element		27H 2274§	2	1					
Element—lower	**342,**	27H 2275§	3	1				342–51796 on	
Container—oil	**10/42**	27H 2276§	4	1				10/42–51796 on	
Gasket		17H 1261§	5	1					
Clamp and screw		27H 2277§	6	1					
Extension—air cleaner—short		NT 6894§	7	1					
Extension—air cleaner—long		NT 8369§	8	1					Optional alternative
Clip—extension to air cleaner		NT 6732§	9	1					
Screw—clip		HNS 0507	10	1					
Nut—screw	**3DL,**	FNN 105	11	1					
Washer—spring—nut	**342,**	LWN 205	12	1					
Pre-cleaner	**10/42**	NT 6491§	13	1					
Strap—air cleaner retaining		NT 8281§	14	1					
Pin—strap—plain		AMK 802	15	1					
Pin—strap—screwed		AMK 158	16	1					
Screw—pin		PMZ 0532	17	1					
Pipe—air intake	**3DL,**	NT 8269§	18	1				3DL–771–501 on	
Hose—pipe to air cleaner	**342**	NT 8328§	19	1				772–501 on	
Hose—elbow—air cleaner		NT 8283§	20	1				342–24000 to 51795	
Pipe—air intake	**342,**	ATJ 3109§	18	1					
Hose—pipe to air cleaner	**10/42**	ATJ 3107§	19	1				342–51796 on	
Hose—elbow—air cleaner		ATJ 3108§	20	1				10/42–51796 on	
Clip—hose	**3DL,**	HCS 2228	21	2					
Clip—hose	**342**	HCS 1622	22	2					
Tie-bar—air cleaner extension to exhaust pipe extension		NT 6735§	23	1					For use with long air cleaner extension only
Clip—tie-bar to air cleaner extension	**3DL,**	NT 6732§	24	1					
Clip—tie-bar to exhaust pipe extension	**342,** **10/42**	NT 5639§	25	1					
Screw—clip		HNS 0508	26	2					
Nut—screw		FNN 105	27	2					
Washer—spring—nut		LWN 205	28	2					

§ **Parts peculiar to Tractor only** **See title-page for application**



CLUTCH

Full details of the clutch applicable to the Nuffield Tractor are contained in Tractor Engine Service Parts List, publication AKD 3515.

	Page	Plate
CLUTCH OPERATING ROD	ME 1	E 1
CLUTCH PEDAL	ME 1	E 1
CLUTCH WITHDRAWAL LEVER	ME 1	E 1

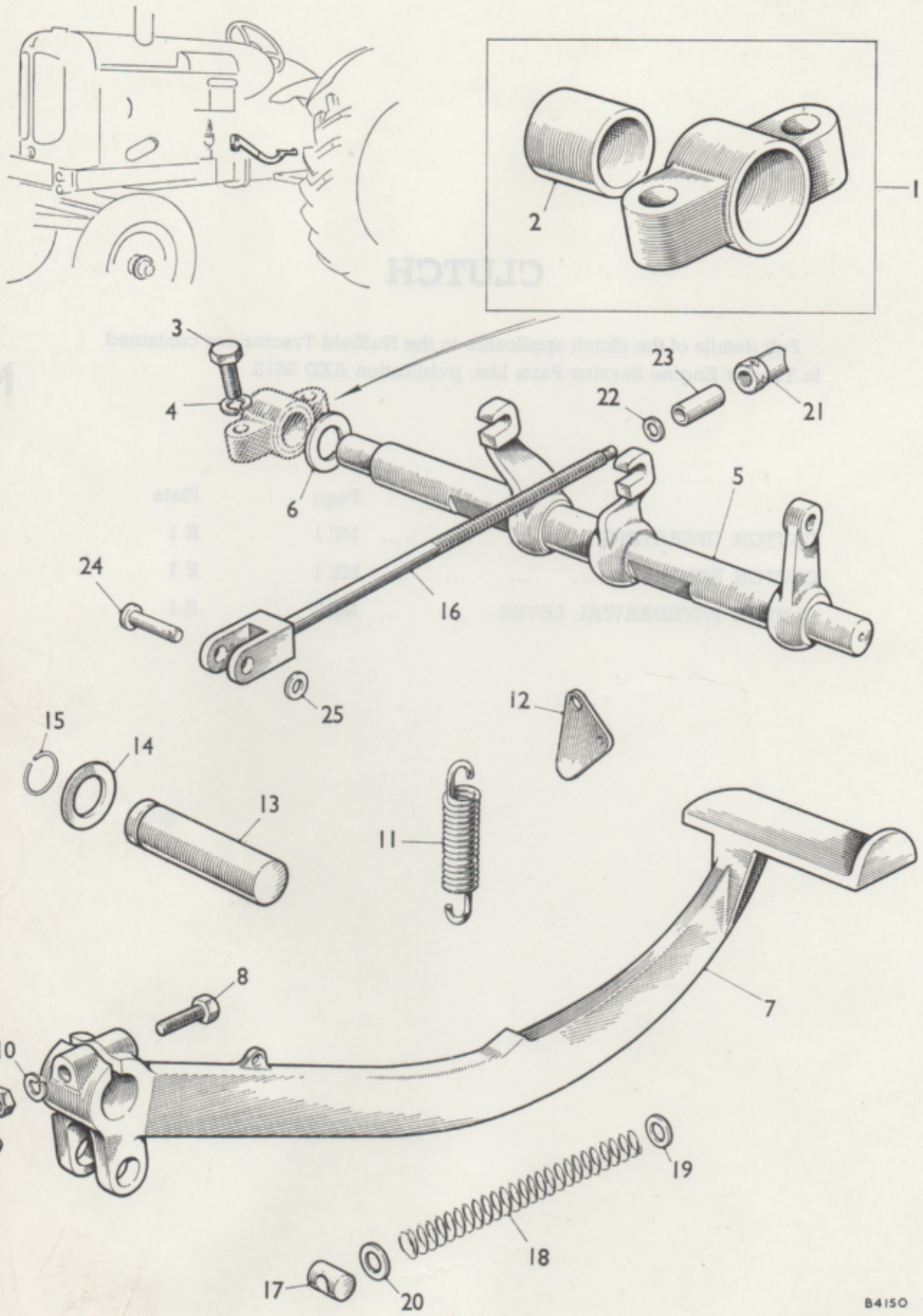

To face page ME 1

DESCRIPTION	Part No.	Illus. No.	Quantity	Stock recommds. DIST. Exp.	Stock recommds. DIST. UK	Stock recommds. D	Change Point	REMARKS
CLUTCH								
CLUTCH PEDAL AND LINKAGE								
Bracket—clutch withdrawal shaft	NT 1251§	1	2					
Bush	NT 3102§	2	2					
Bolt—bracket to frame	HBN 0610	3	4					
Washer—spring—bolt	LWN 206	4	4					
Clutch withdrawal lever and shaft	NT 6716§		1					Not available; use ATJ 5021
	ATJ 5021§	5	1					
	ATJ 5026§	5	1					For use with 13″ clutch
Washer—plain—shaft	NT 3089§	6	1					
Pedal—clutch	NT 1992§		1					Not available; use ATJ 5019
Pedal—clutch	ATJ 5019§	7	1					
Bolt—clutch pedal clamping	HBN 0618	8	1					
Nut—bolt	FNN 106	9	1					
Washer—spring—nut	LWN 206	10	1					
Spring—pedal return	NT 3134§	11	1	★	★			
Plate—anchor—spring	NT 2218§	12	1					
Shaft—clutch pedal	NT 1991§	13	1				4DM–DE1001 to 10387	
Shaft—clutch pedal	NT 6719§	13	1				4DM–IDE10388 on	
							787–501 on	
							792–501 on	
							3DL–771–501 on	
							772–501 on	
							342–24000 on	
							460–24000 on	
							10/42–24000 on	
							10/60–24000 on	
Washer—plain—shaft	PWN 106	14	1					
Circlip—shaft	NT 4008§	15	1					
Rod—clutch operating	NT 5610§	16	1					
Pin—trunnion	NT 2217§	17	1					
Spring—locking	NT 3037§	18	1					
Washer—plain—rod	PWN 105	19	1					
Washer—pressed—rod	ATJ 1042§	20	1					
Nut—clutch pedal adjusting	NT 5611§	21	1					
Washer—packing	NT 4106§	22	1					
Piece—distance	NT 6745§		1					Not available; use ATJ 5031
Piece—distance	ATJ 5031§	23	1					
Pin—operating rod to lever	NT 3036§	24	1					
Washer—plain—pin	PWN 106	25	1					

§ **Parts peculiar to Tractor only** **See title-page for application**

MAIN CASING

	Page	Plate
AXLE CASING	MF 5	F 5
CLUTCH AND STEERING HOUSING ...	MF 2	F 2
GEARBOX CASING (FIVE-SPEED)	MF 3	F 3
GEARBOX CASING (TEN-SPEED)	MF 4	F 4
†MAIN FRAME	MF 1·1	F 1

GEARBOX AND TRANSMISSION

The gearbox details in this section are applicable to basic tractors only, for gearbox when fitted with independent power take-off mechanism, see section MS

MF

	Page	Plate
BRAKES (4DM)	MF 30	F 26
BRAKES (3DL, 4DM, 342, 460)	MF 31, MF 32	F 27
BRAKES (10/42, 10/60)	MF 33	F 28
†DIFFERENTIAL (3DL, 4DM,342, 460) ...	MF 18	F 16
†DIFFERENTIAL (342, 460, 10/42, 10/60) ...	MF 19	F 16·1
DIFFERENTIAL LOCK (342, 460)	MF 25	F 21
DIFFERENTIAL LOCK (10/42, 10/60) ...	MF 28	F 24
GEARBOX CASING (FIVE-SPEED)	MF 6	F 6
GEARBOX CASING (TEN-SPEED)	MF 13	F 11
GEARBOX SELECTORS (FIVE-SPEED) ...	MF 11, MF 12	F 10
GEARBOX SELECTORS (TEN-SPEED) ...	MF 17	F 15
LAYSHAFT AND GEARS (FIVE-SPEED) ...	MF 10	F 9
LAYSHAFT AND GEARS (TEN-SPEED) ...	MF 16	F 14
MAINSHAFT AND GEARS (FIVE-SPEED) ...	MF 9	F 8
MAINSHAFT AND GEARS (TEN-SPEED) ...	MF 15	F 13
REAR AXLE (4DM)	MF 20	F 17
REAR AXLE (3DL, 4DM, 342, 460) ...	MF 21 - MF 23	F 18
REAR AXLE (342, 460)	MF 24	F 20
REAR AXLE (10/42, 10/60)	MF 27	F 23
REAR SLIDING HUBS	MF 29	F 25
TRANSMISSION SHAFT (FIVE-SPEED) ...	MF 7, MF 8	F 7
TRANSMISSION SHAFT (TEN-SPEED) ...	MF 14	F 12

†Revised Information—Issue 2

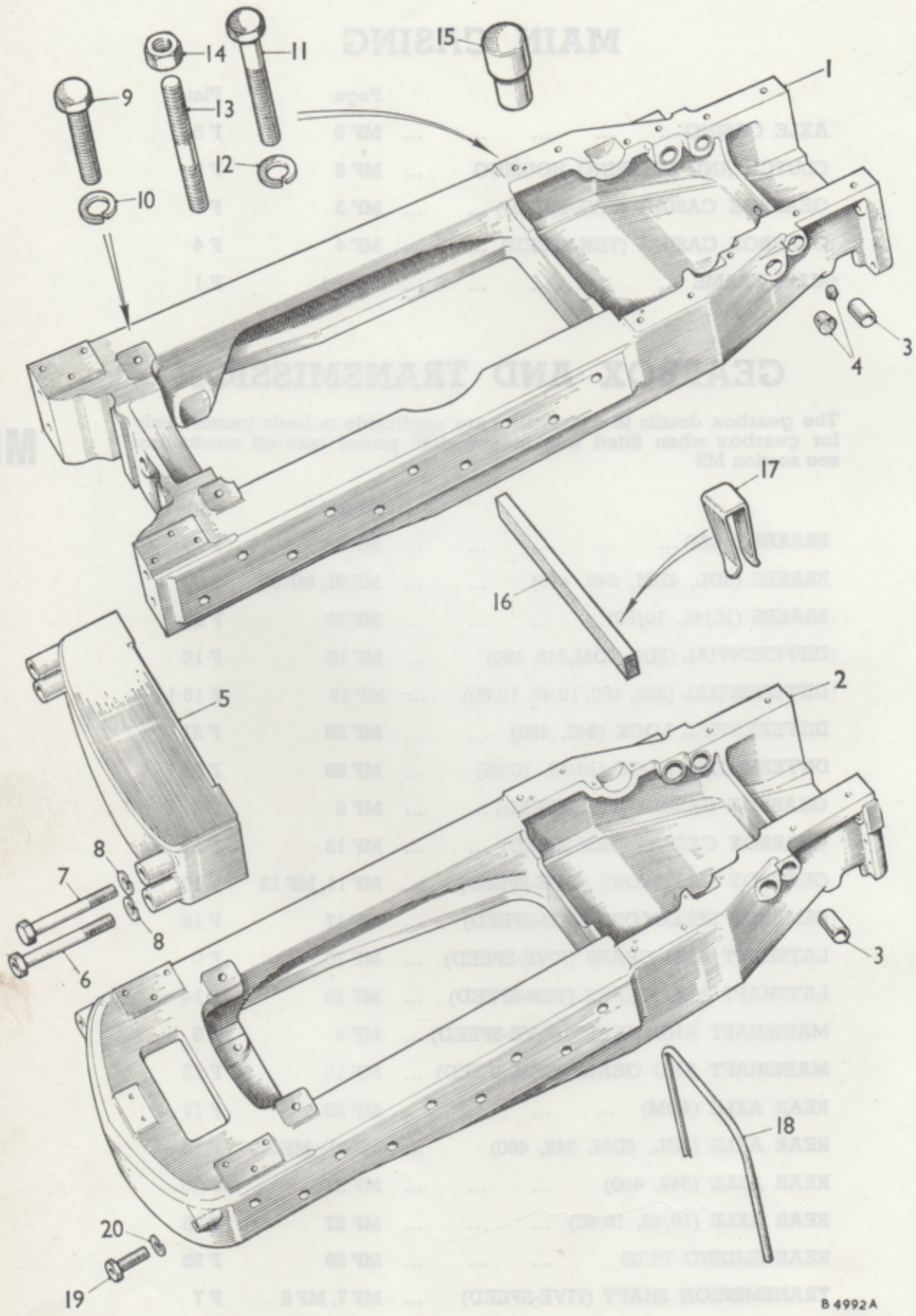
15
14
11
9
13
12
10
1
3
4
17
16
5
2
8
7
8
6
3
18
20
19
B 4992A

DESCRIPTION		Part No.	Illus. No.	Quantity	Stock recommds. DIST. Exp.	Stock recommds. DIST. UK	Stock recommds. D	Change Point	REMARKS
MAIN CASINGS									
Frames—main—basic	**4DM**	NT 6712§		1				DE1001 to 10387	
	4DM, 460, 10/60	NT 6281§		1				4DM–IDE10388 on	Not available; use ATJ 5085 with 4 off NT 6751
								787–501 on	
								460–24000 on	
								10/60–57420 on	
	3DL, 342, 10/42	†NT 8090§		1					Not available; use ATJ 5083 with 4 off NT 6751
Frame—main—I.P.T.O.		NT 7575§		1					Not available; use component parts
Frame	**4DM, 460, 10/60**	†NT 6280§	1	1					Not available; use ATJ 5058
Frame		†ATJ 5085§	1	1					
Bush		LBS 1416	3	5					
Frame—main—I.P.T.O.		ATJ 9263§		1					Not available; use component parts
Frame	**3DL, 342, 10/42**	†NT 8089§	2	1					Not available; use ATJ 5083
Frame		†ATJ 5083§	2	1					
Bush		LBS 1416	3	5					
Plug—frame (cork)		NT 3145§	4	4					
Plug—frame (cork)		NT 6751§	4	3					When I.P.T.O. is fitted
Extension—frame		NT 4852§	5	1					
Bolt—extension to frame	**4DM, 460, 10/60**	NT 5756§	6	2					
Bolt—extension to frame		NT 5755§	7	2					
Washer—spring—bolt		LWN 212	8	4					
Bolt—engine support bracket to frame		HBN 0910	9	2					
Washer—spring—bolt		LWN 209	10	2					
Bolt—engine rear to frame		HBN 0914	11	1					
Washer—spring—bolt		LWN 209	12	2					
Stud—engine to rear frame		ATJ 3151§	13	1					
Nut—stud		FNZ 109	14	1					
Dowel—engine rear to frame		NT 3083§	15	2					
Strip—sealing—flywheel to frame		NT 6695§	16	1					
Clip—sealing strip		NT 6990§	17	2					
Strip—sealing—flywheel housing to clutch housing		NT 1247§	18	1					
Bolt—main frame—front		NT 8362§	19	2					
Washer—spring—bolt	**3DL, 342, 10/42**	LWN 212	20	2					

§ Parts peculiar to Tractor only

See title-page for application

†Revised Information—Issue 2

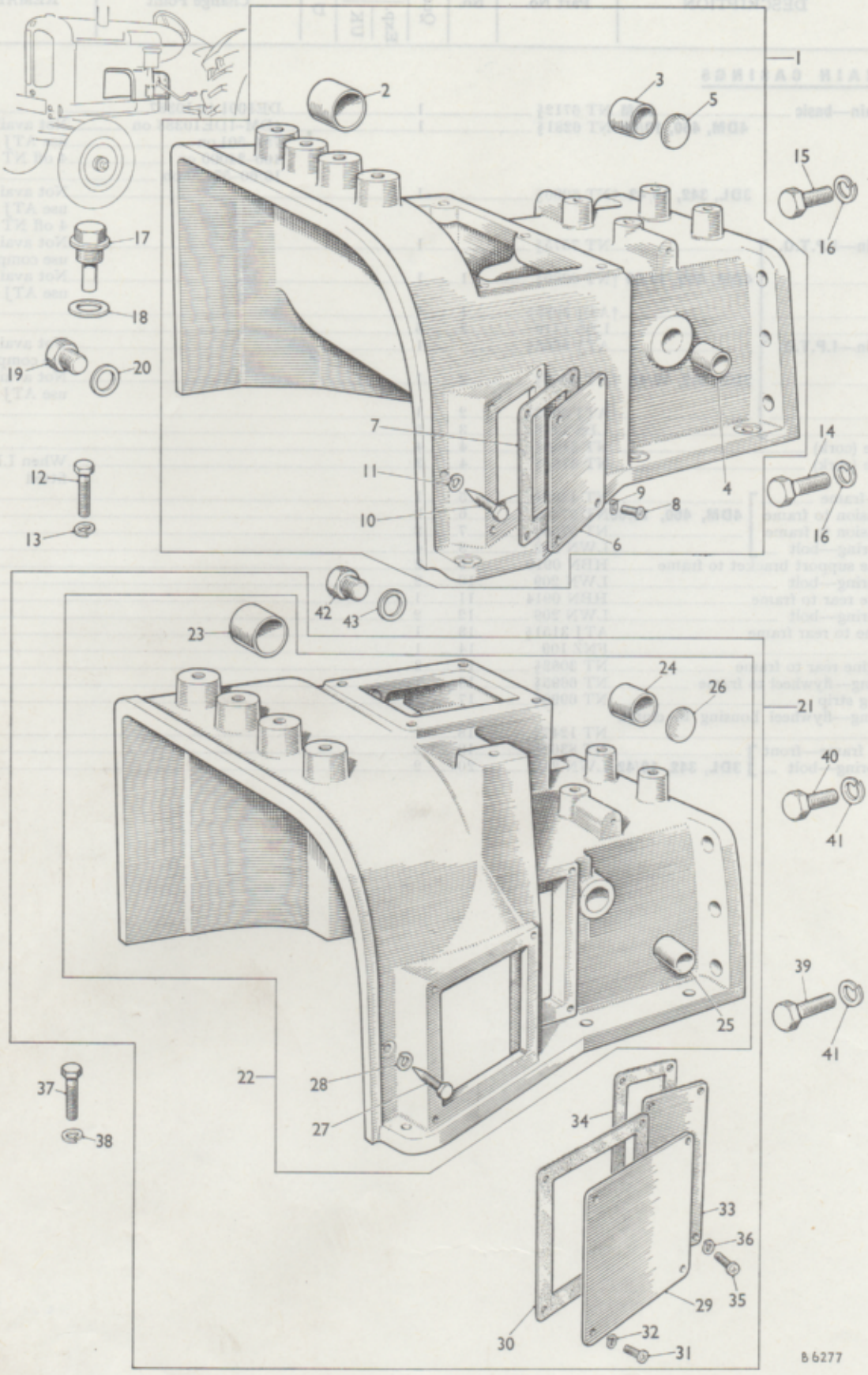
1
2
3
5
15
16
17
18
19
20
7
11
10
9
8
4
14
16
12
13
6
42
43
23
24
26
21
40
41
39
41
25
22
28
27
37
38
34
33
36
35
29
30
32
31
B 6277

DESCRIPTION		Part No.	Illus. No.	Quantity	Stock recommds. DIST. Exp.	Stock recommds. DIST. UK	Stock recommds. D	Change Point	REMARKS
Main Casings—*continued*									
Housing assembly—clutch and steering		NT 5632§	1	1					
Bush									
Steering cross-shaft		NT 3004§	2	1					
Steering cross-shaft		NT 3007§	3	1					
Clutch pedal shaft		NT 3144§	4	2					
Plug—core		ATJ 1026§	5	1					
Cover—clutch inspection		NT 1226§	6	1					
Joint—cover		NT 1227§	7	1					
Screw		PWN 0410	8	4					
Washer—spring		LWN 204	9	4					
Pointer—timing	4DM	NT 5607§	10	1				DE1001 to 10387	
Washer—spring		LWN 204	11	1					
Bolt		HBN 0712	12	6					
Washer—spring		LWN 207	13	6					
Bolt		†ATJ 1079§	14	1					Part No. change; was HBN 0916
Bolt		†ATJ 1078§	15	5					Part No. change; was HBN 0914
Washer—spring		LWN 209	16	6					
Plug—filler and dipstick		NT 5622§	17	1					
Washer—plain		NT 3019§	18	1					
Plug—drain		ADP 212	19	1					
Washer—plain		NT 3019§	20	1					
Housing assembly—clutch and steering		NT 7484§	21	1					Not available; use component parts
Housing sub-assembly—clutch and steering		ATJ 9527§	22	1					
Bush									
Steering cross-shaft		NT 5319§	23	1					
Steering cross-shaft		NT 3007§	24	1					
Clutch pedal shaft		NT 3144§	25	2					
Plug—core		ATJ 1026§	26	1				4DM–IDE10388 on	
Pointer—timing		NT 5607§	27	1				787–501 on	
Washer—spring	3DL,	LWN 204	28	1				792–501 on	
Cover—clutch inspection	4DM,	NT 6753§	29	1				3DL–771–501 on	
Joint—cover	342,	NT 6754§	30	1				772–501 on	
Screw	460,	PMN 0410	31	4				342–24000 on	
Washer—spring	10/42,	LWN 204	32	4				460–24000 on	
Cover—control inspection	10/60	NT 6755§	33	1				10/42–57420 on	
Joint—cover		NT 6756 §	34	1				10/60–57420 on	
Screw		PMN 0410	35	4					
Washer—spring		LWN 204	36	4					
Bolt		HBN 0712	37	6					
Washer—spring		LWN 207	38	6					
Bolt		†ATJ 1079§	39	1					Part No. change; was HBN 0916
		†ATJ 1078§	40	3					Part No. change; was HBN 0914
		ATJ 7659§	40	2					
Washer—spring		LWN 209	41	6					
Nut—bolt		†ATJ 1081§		2					
Plug—drain and filler		ADP 212	42	2					
Washer—plain—plug		NT 3019§	43	2					

§Parts peculiar to Tractor only

See title-page for application

†Revised Information. Issue 3

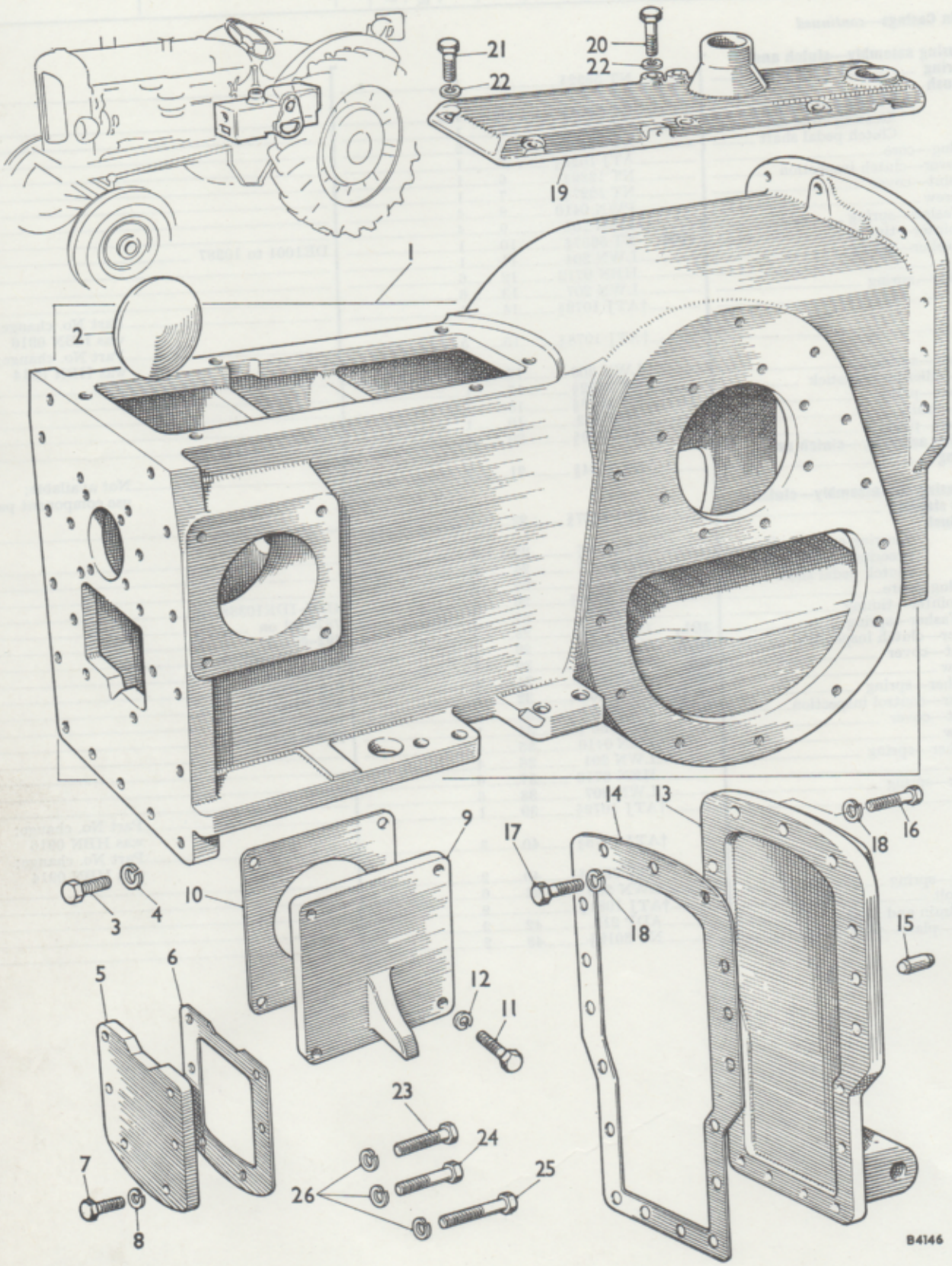
21
22
20
22
19
1
2
14
13
9
17
18
16
10
3
4
18
15
5
6
12
11
23
24
7
26
25
8
B4146

DESCRIPTION	Part No.	Illus. No.	Quantity	Stock recommds. DIST. Exp.	Stock recommds. DIST. UK	Stock recommds. D	Change Point	REMARKS
Main Casings—*continued*								
Casing—gearbox								
Basic	NT 7423§		1				4DM–DE1001 to 10387	Not available; use ATJ 9451
Basic	ATJ 9451§	1	1				4DM–IDE10388 on 787–501 on 3DL–771–501 on 460–24000 on 342–24000 on	
I.P.T.O.	NT 7424§	1	1				4DM–IDE10388 on 792–501 on 3DL–772–501 on 460–24000 on 342–24000 on	
Plug—core	NT 4952§		3				4DM–DE1001 on IDE10388 on	Not available; use ATJ 7102
Plug—core	ATJ 7102§	2	3				787–501 on 792–501 on 3DL–771–501 on 772–501 on 460–24000 on 342–24000 on	
Screw—blanking—front casing	HNS 0606	3	4					
Washer—spring—screw	LWN 206	4	4					
Cover—front	NT 1127§	5	1				4DM–DE1001 to 10387	
Joint—cover	NT 1315§	6	1	★	★			
Cover—front	NT 6738§	5	1				4DM–IDE10388 on 787–501 on 3DL–771–501 on 460–24000 on 342–24000 on	
Joint—cover	NT 6739§	6	1	★	★			
Bolt—front cover	HBN 0616	7	6					
Washer—spring—bolt	LWN 206	8	6					
Cover—side	NT 1184§	9	1				4DM–DE1001 on IDE10388 on 787–501 on 792–501 on 3DL–771–501 on 772–501 on 460–24000 on 342–24000 on	
Joint—cover	NT 4072§	10	1	★	★			
Bolt—side cover	HBN 0912	11	4					
Washer—spring—bolt	LWN 209	12	4					
Cover—rear	NT 5572§	13	1					
Joint—cover	NT 3361§	14	1	★	★			
Dowel—plain—rear cover	NT 3582§	15	2					
Bolt—rear cover	HBN 0712	16	12					
Bolt—rear cover	HBN 0714	17	1					
Washer—spring—bolt	LWN 207	18	13					
Cover—gearbox top	NT 6038§		1				4DM–DE1001 on IDE10388 on 787–501 to 11725 (less 9910 to 10000) 792–501 to 10895 (less 4110 to 10000) 3DL–771–501 to 7333 772–501 to 2031	Not available; use ATJ 7156
Cover—gearbox top	ATJ 7156§	19	1				4DM–787–11726 on (plus 9910 to 10000) 792–10896 on (plus 4110 to 10000) 3DL–771–7334 on 772–2032 on 460–24000 on 342–24000 on	
Bolt—top cover to gearbox casing	HBN 0610	20	7				4DM–DE1001 on IDE10388 on 787–501 on 792–501 on 3DL–771–501 on 772–501 on 460–24000 on 342–24000 on	
Bolt—top cover to gearbox casing	HBN 0616	21	1					
Washer—spring—bolt	LWN 206	22	8					
Bolts—gearbox casing to main frame	HBN 0918	23	5					
	ATJ 7257§	24	2					
	NT 5548§	25	2					
Washer—spring—bolt	LWN 209	26	9					

§ **Parts peculiar to Tractor only** **See title-page for application**

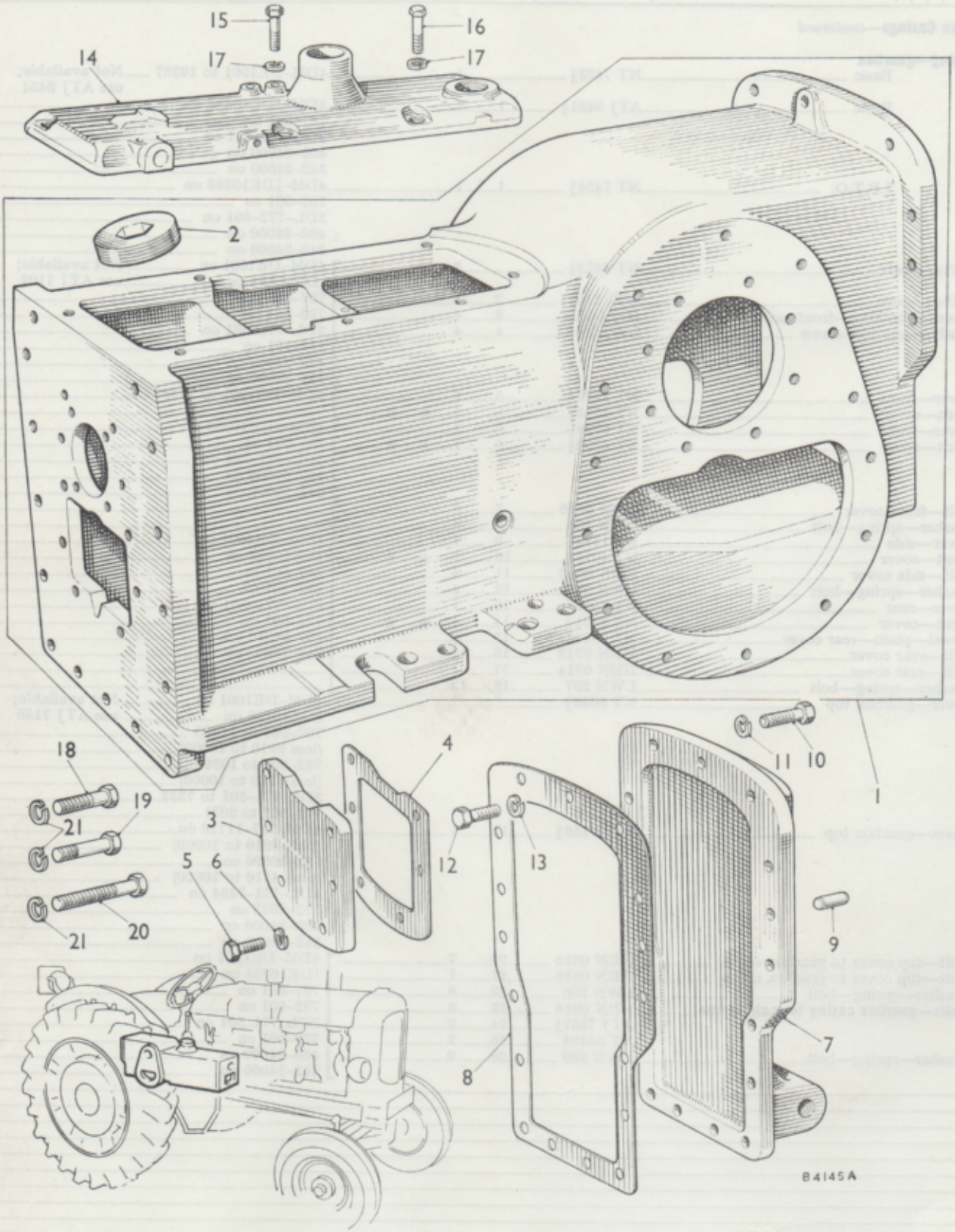
15
16
14
17
17
2
18
19
21
3
4
5
6
12
13
11
10
1
21
20
9
7
8
84145A

DESCRIPTION		Part No.	Illus. No.	Quantity	Stock recommds. DIST. Exp.	Stock recommds. DIST. UK	Stock recommds. D	Change Point	REMARKS
Main casings—*continued*									
Casing—gearbox—basic		ATJ 9458§	1	1					
Casing—gearbox—I.P.T.O.		ATJ 9459§	1	1					
Plug—core		ATJ 7102§	2	3					
Screw—blanking—front casing		HNS 0606		4					
Washer—spring—screw		LWN 206		4				†10/42 57420 on	
Cover—front		NT 6738§	3	1				†10/60 57420 on	
Joint—cover		NT 6739§	4	1					
Bolt—front cover	10/42	HBN 0610	5	6					
Washer—spring—bolt		LWN 206	6	6					
Cover—rear	10/60	ATJ 6411§	7	1					
Joint—cover		NT 3361§	8	1					
Dowl—plain—rear cover		NT 3582§	9	2					
Bolt—rear cover		HBN 0712	10	12					
Washer—spring—bolt		LWN 207	11	12					
Bolt—rear cover		ATJ 1071§		3				†10/42 57420 to ▼	
								†10/60 57420 to ▼	
Bolt—rear cover		ATJ 1070§	12	3				†10/42 ▼ on	
Washer—spring—belt		LWN 208	13	3				†10/60 ▼ on	
Cover—gearbox top		ATJ 7526§	14	1					
Bolt—top cover		HBN 0610	15	6					
Bolt—top cover		HBN 0616	16	2					
Washer—spring—bolt		LWN 206	17	8				†10/42 57420 on	
								†10/60 57420 on	
Bolts									
Gearbox casing to main frame		†ATJ 1080§	18	5					Part No. change; was HBN 0918
Gearbox casing to main frame		ATJ 7257§	19	2					
Gearbox casing to main frame		NT 5548§	20	2					
Washer—spring—bolt		LWN 209	21	9					

§Parts peculiar to Tractor only

See title-page for application

▼ Change point not available
†Revised Information. Issue 3

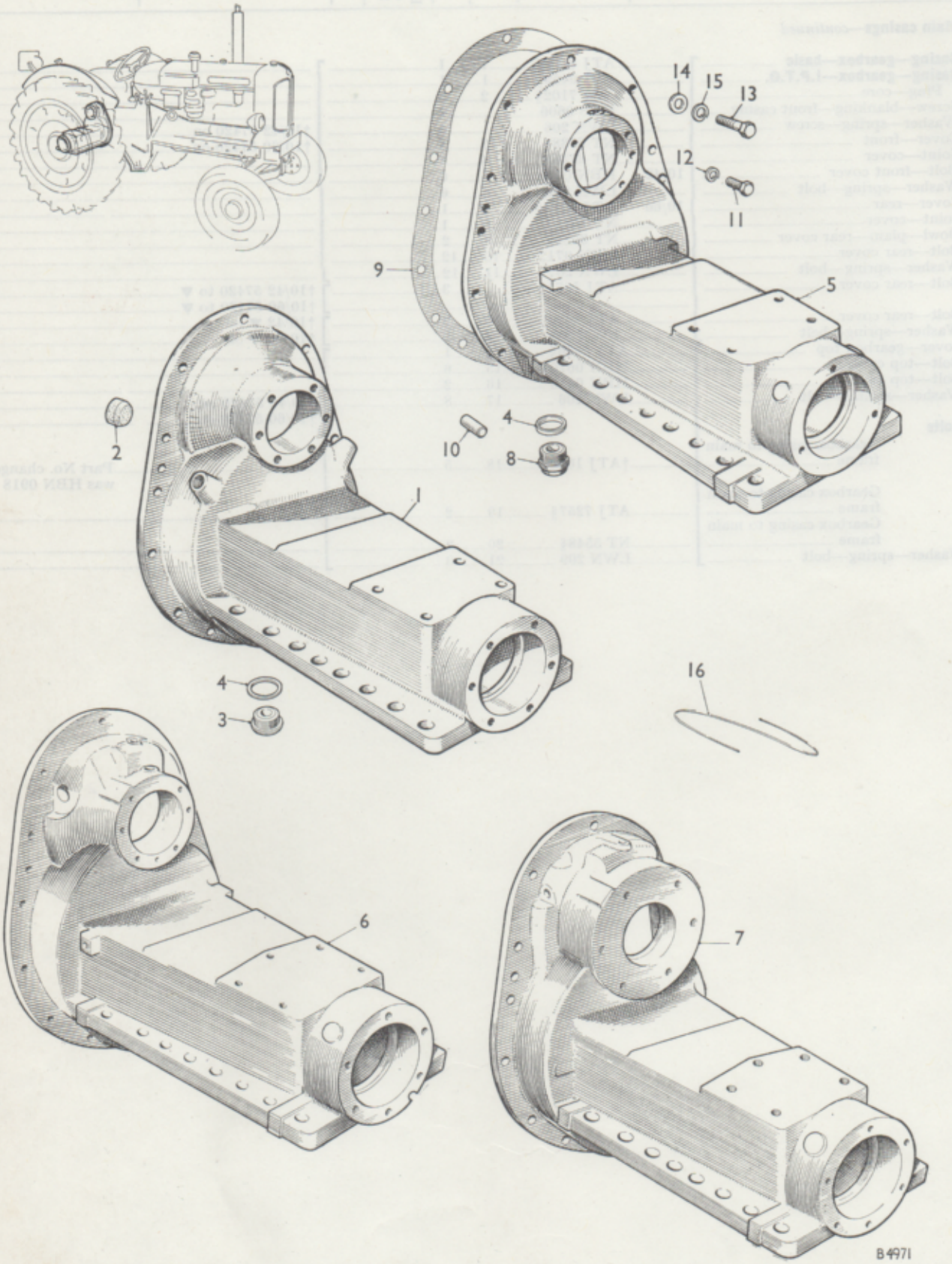
14
15
13
12
11
9
5
2
10
4
8
1
4
3
16
6
7
B4971

DESCRIPTION	Part No.	Illus. No.	Quantity	Stock recommds. DIST. Exp.	Stock recommds. DIST. UK	Stock recommds. D	Change Point	REMARKS
Main Casings—*continued*								
Casing—axle	NT 6080§	1	2					
Plug—axle casing (cork)	NT 3145§	2	2				4DM–DE1001 to 5936	
Plug—drain	NT 5847§	3	2					
Washer—plain—plug	ATJ 1030§	4	2					
Casing—axle	NT 7307§		2					
Plug—drain	NT 5847§	3	2				4DM–DE5937 to 10387	
Washer—plain—plug	ATJ 1030§	4	2					
Casings—axle	NT 7179§	5	2				4DM–IDE10388 on	
							787–501 on	
							792–501 on	
							3DL–771–501 on	
							772–501 on	
							460–24000 to 38249 (less 38173 to 38192)	
							342–24000 to 38249 (less 38173 to 38192)	
Right-hand	ATJ 7205§	6	1				460–38250 on (plus 38173 to 38192)	
Left-hand	NT 7179§	6	1					
							342–38250 on (plus 38173 to 38192)	
Right-hand	ATJ 7549§	7	1				10/42–57420 on	
Left-hand	ATJ 7550§	7	1				10/60–57420 on	
Plug—drain	ADP 116	8	2				4DM–IDE10388 on	
							787–501 on	
							792–501 on	
							3DL–771–501 on	
							772–501 on	
							342–24000 on	
							460–24000 on	
							10/42–24000 on	
							10/60–24000 on	
Joint—axle casing	NT 4073§	9	2	★	★			
Dowel—plain—axle casing	NT 8224§	10	2					
Bolt—casing to gearbox	HBN 0712	11	24					
Washer—spring—bolt	LWN 207	12	24					
Bolt—casing to gearbox	HBN 0714	13	4					
Washer—plain—bolt	PWN 107	14	4					
Washer—spring—bolt	LWN 207	15	4					
Wire—locking	ATJ 9392§	16	A/R					Supplied in multiples of 5 yards

§ **Parts peculiar to Tractor only**

See title-page for application

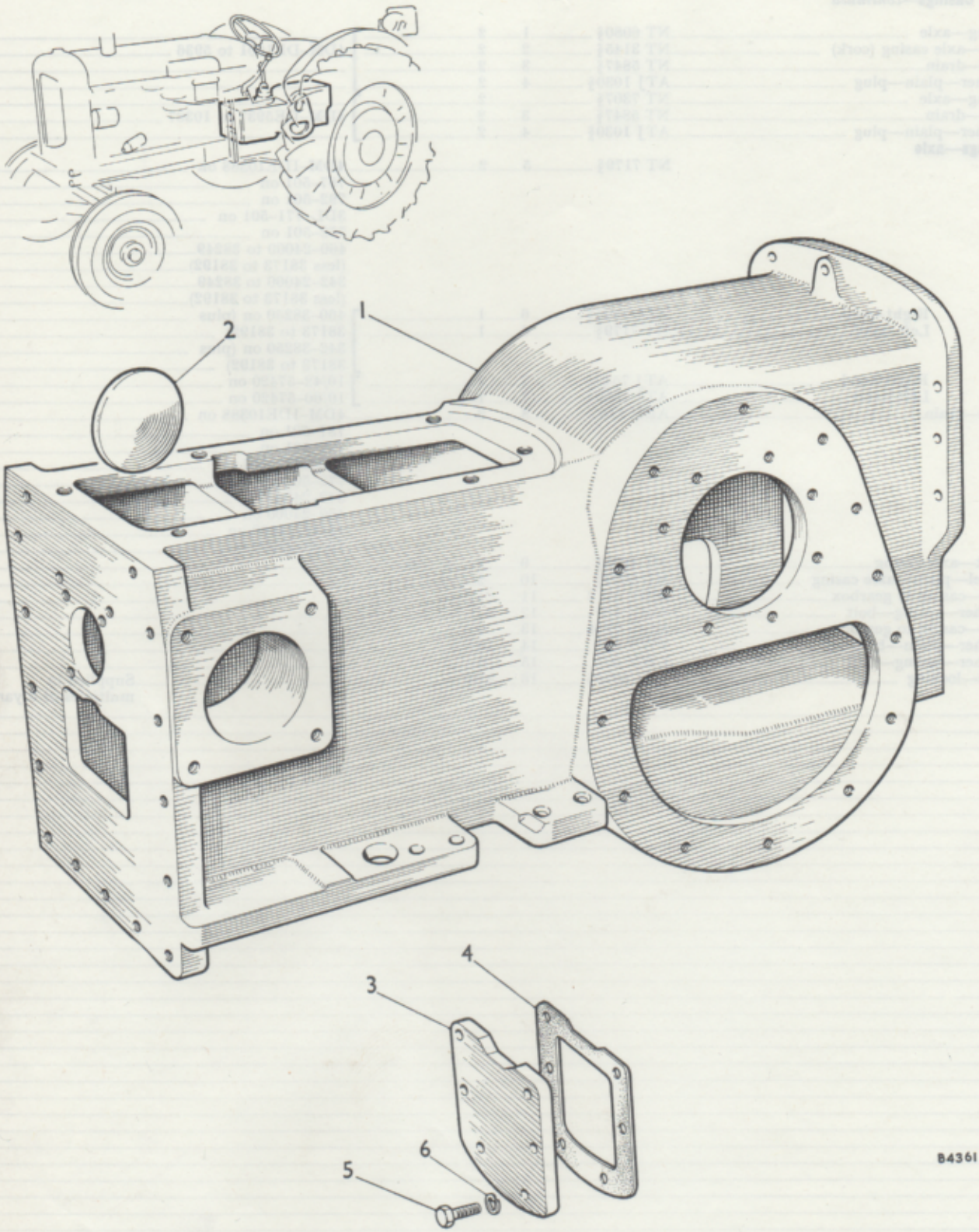

To face page MF 6

DESCRIPTION	Part No.	Illus. No.	Quantity	Stock recommds. DIST. Exp.	Stock recommds. DIST. UK	Stock recommds. D	Change Point	REMARKS
FIVE-SPEED GEARBOX								
Gearbox assembly	NT 6923§		1				(G) U17508 to U34909	
Gearbox assembly	NT 8092§		1				(G) I-34910 on 4010–501 on	
Gearbox assembly (less top cover and selectors)	NT 5778§		1				(G) U17508 to U34909	Not available; use component parts
Gearbox assembly (less top cover and selectors)	NT 8091§		1				(G) I-34910 on 4010–501 on	
Casing—gearbox	NT 7423§		1				(G) U17508 to U34909	Not available; use ATJ 9451
Casing—gearbox	ATJ 9451§	1	1				(G) I-34910 on 4010–501 on	
Plug—core	NT 4952§		3					Not available; use ATJ 7102
Plug—core	ATJ 7102§	2	3					
Screw—blanking—front casing	HNS 0606		4					
Washer—spring—screw	LWN 206		4					
Cover—front	NT 1127§	3	1				(G) U17508 to U34909	
Joint—cover	NT 1315§	4	1					
Cover—front	NT 6738§	3	1				(G) I-34910 on	
Joint—cover	NT 6739§	4	1				4010–501 on	
Bolt—front cover	HBN 0610	5	6					
Washer—spring—bolt	LWN 206	6	6					

§ **Parts peculiar to Tractor only**

See title page for application

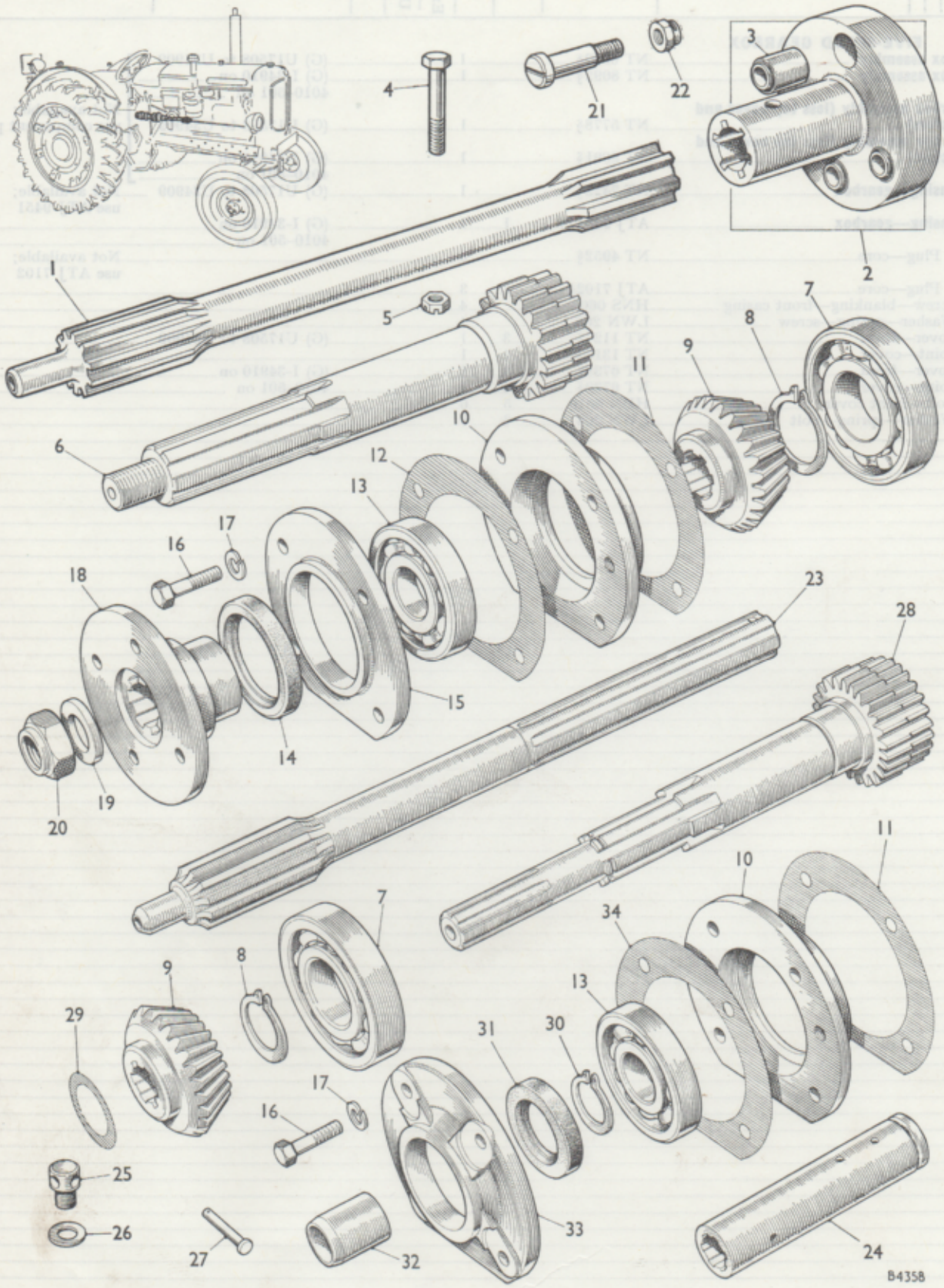

To face page MF 7

DESCRIPTION	Part No.	Illus. No.	Quantity	Stock recommds. DIST. Exp.	Stock recommds. DIST. UK	Stock recommds. D	Change Point	REMARKS
Five-speed Gearbox—*continued*								
Shaft—transmission	NT 1316§	1	1					
Coupling shaft	NT 5198§	2	1					
Bush—silentbloc	NT 5170§	3	4	★	★			
Bolt—shaft	ATJ 9366§	4	1					
Nut—slotted—bolt	FNN 306	5	1					
Shaft—primary	NT 6117§	6	1	★	★			
Bearing—rear	NT 3053§	7	1	★	★			
Circlip—bearing	ESC 040	8	1					
Pinion—bevel	NT 6136§	9	1	★	★			
Housing—bearing—front	NT 6663§	10	1					
Shims								
	NT 1185§	11	A/R					Not available; use NT 6665
	NT 1186§	11	A/R				(G) U17508 to U34909	Not available; use NT 6666
	NT 7497§	11	A/R					
	NT 1185§	12	A/R					
Bearing—front	6K 538	13	1	★	★			Part No. change; was ATJ 1019
Seal—oil	ATC 7513	14	1	★	★			Part No. change; was NT 3074
Cover—bearing—front	NT 5367§	15	1					
Bolt—bearing cover	HBN 0610	16	4					
Washer—spring—bolt	LWN 206	17	4					
Flange—drive	NT 5751§	18	1					
Washer—plain—flange	ATJ 9351§	19	1					
Nut—lock—primary shaft	LNN 212	20	1					
Bolt—coupling to flange	NT 5790§	21	4					
Nut—bolt	LNN 206	22	4					

§ Parts peculiar to Tractor only

See title-page for application

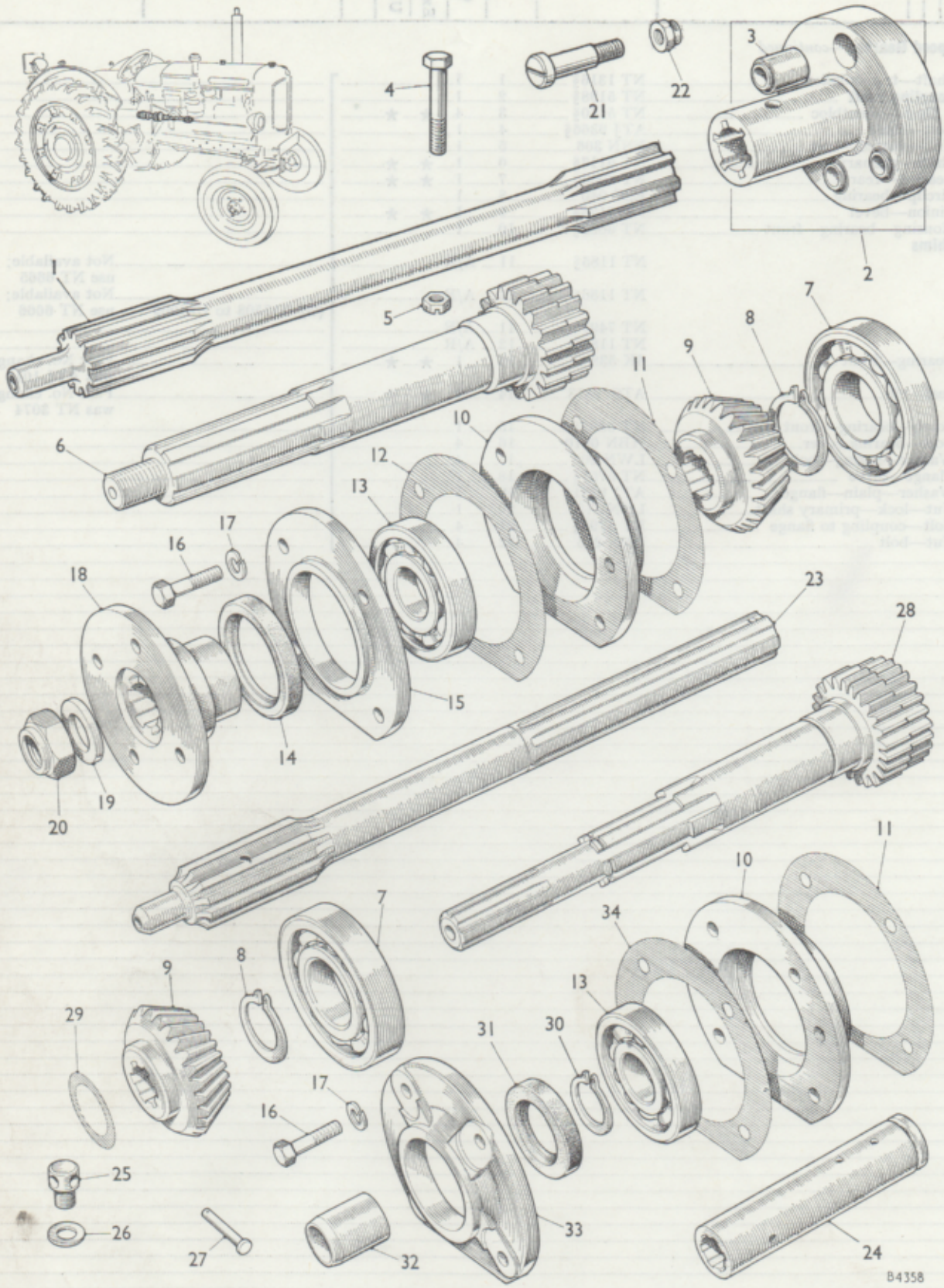

To face page MF 8

DESCRIPTION	Part No.	Illus. No.	Quantity	Stock recommds. DIST. Exp.	Stock recommds. DIST. UK	Stock recommds. D	Change Point	REMARKS
Five-speed Gearbox—*continued*								
Shaft—transmission	NT 8065§	23	1					
Sleeve—driving	NT 8063§		1				(G) I-34910 on 4010–501 on	Not available; use ATJ 7363
Sleeve—driving	ATJ 7363§	24	1					
Plug—driving sleeve	NT 8064§	25	1				4DM–787–868 to 20368 (less 11692 to 20000) 3DL–771–958 to 7768	
Plug—driving sleeve	ATJ 7240§	25	1				4DM–787–20369 on (plus 11692 to 20000) 3DL–772–7769 on 460–24000 on 342–24000 on	
Washer—plug (fibre)	ATJ 1027§	26	1					
Pin—clevis	CLZ 0427	27	2				(G) I-34910 on 4010–501 on	
Shaft—primary	NT 6750§	28	1	★	★			
Bearing—rear	NT 3053§	7	1	★	★			
Circlip—bearing	ESC 040	8	1					
Pinion—bevel	NT 6136§	9	1	★	★		(G) I-34910 on 4010–501 to 4010–43956	
Pinion—bevel	ATJ 7481§	9	1	★	★		(G) 4010–43957 on	
Shims								
·003″ (·076 mm.)	NT 7443§	29	A/R					One used of selected size
·007″ (·178 mm.)	NT 7444§	29	A/R					
·025″ (·635 mm.)	NT 7499§	29	A/R					
Housing—bearing—front	NT 6663§	10	1					
Shim—·003″ (·076 mm.)	NT 6665§	11	A/R					
Bearing—front	6K 538	13	1	★	★			Part No. change; was ATJ 1019
Circlip—bearing	ESC 035	30	1					
Seal—oil	3H 2129	31	1	★	★		(G) I-34910 on 4010–501 on	
Sleeve	NT 6741§	32	1					
Cover—bearing—front	NT 6743§	33	1					
Shims								
·003″ (·076 mm.)	NT 6665§	34	A/R					One used of selected size
·010″ (·254 mm.)	NT 6666§	34	A/R					
·020″ (·508 mm.)	NT 7497§	34	A/R					
Bolt—bearing cover	HBN 0610	16	4					
Washer—spring—bolt	LWN 206	17	4					

§ **Parts peculiar to Tractor only** **See title-page for application**

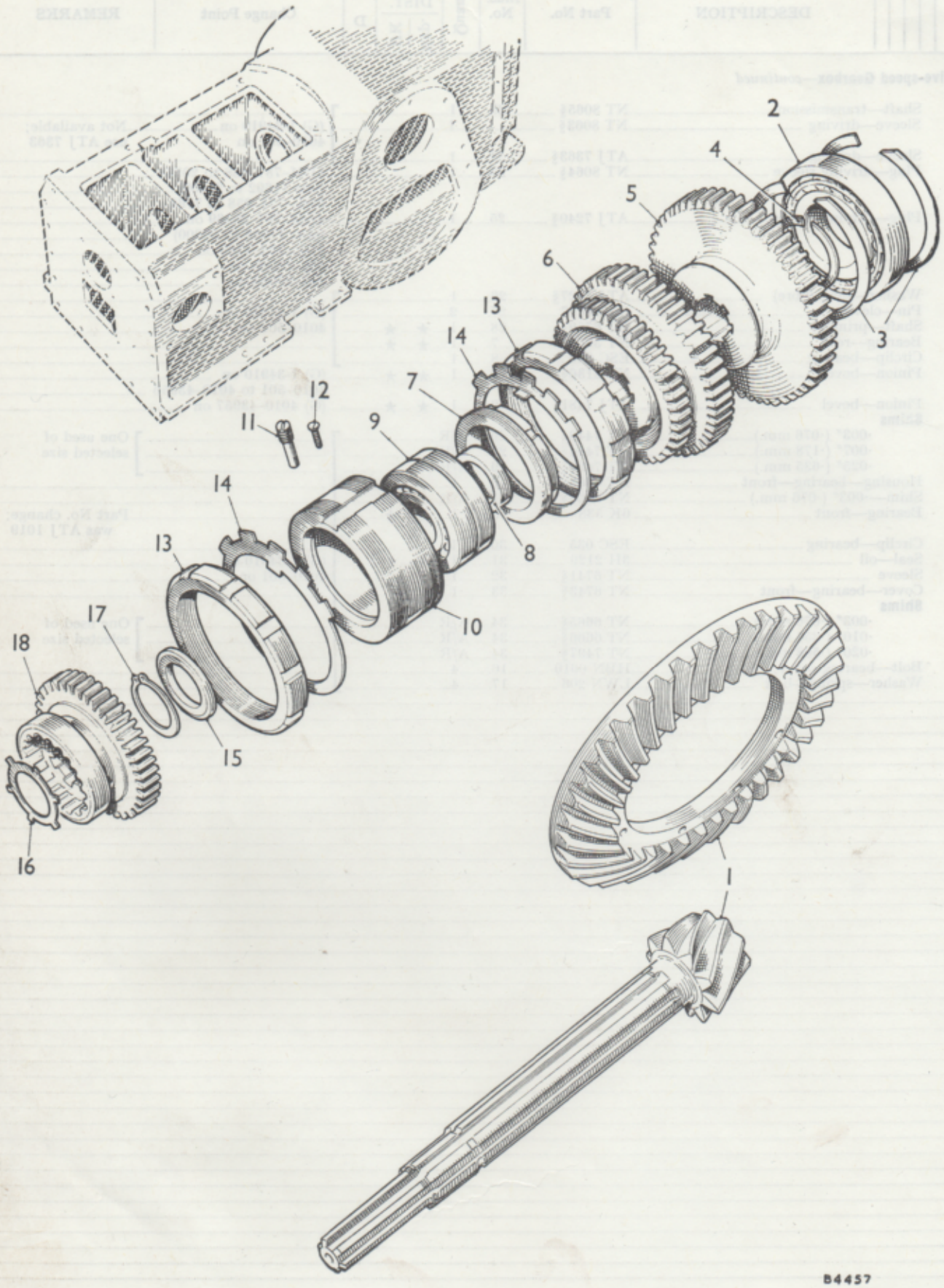

To face page MF 9

DESCRIPTION	Part No.	Illus. No.	Quantity	Stock recommds. DIST. Exp.	Stock recommds. DIST. UK	Stock recommds. D	Change Point	REMARKS
Five-speed Gearbox—*continued*								
Mainshaft and crown wheel	NT 5814§		1				4DM–DE1001 on IDE10388 on 787–501 on 3DL–771–501 on 460–24000 to 24470 342–24000 to 24470	Not available; use ATJ 7422 with 1 off ATJ 7416 and as required ATJ 7417 to ATJ 7421
Mainshaft and crown wheel	ATJ 7422§	1	1				460–24471 on 342–24471 on	
Bearing—rear	NT 3059§	2	1					
Circlips—bearing								
Internal	NT 4013§		2					Not available; use ATJ 1058
Internal	ATJ 1058§	3	2					
External	NT 4011§		1					Not available; use CCN 128
External	CCN 128	4	1					
Gear—1st speed	†NT 113§	5	1					Not available; use ATJ 7780
Gear—1st speed	†AJT 7780§	5	1					
Gear—2nd and 3rd speed	NT 1114§	6	1					
Nut—bearing	NT 4958§	7	1					
Collar—bearing thrust	NT 1119§	8	1					
Bearing—centre	†AMK 7016	9	1					Part No. duplication was NT 3057. For this application use ATJ 1089
Bearing—centre	†ATJ 1089§	9	1					
Housing—bearing	NT 4957§	10	1					
Pin—anti-rotation	NT 4960§	11	1					
Screw—locking	CMN 0308	12	1					
Nut—lock—housing	NT 4959§	13	2					
Washer—lock—nut	NT 1747§	14	2					
Washers—mainshaft								
·169″ (4·293 mm.)	NT 5424§	15	A/R				4DM–DE1001 on IDE10388 on 787–501 on 3DL–771–501 on 460–24000 to 24470 342–24000 to 24470	
·172″ (4·369 mm.)	NT 5423§	15	A/R					
·175″ (4·445 mm.)	NT 5422§	15	A/R					
·178″ (4·521 mm.)	NT 5421§	15	A/R					
·181″ (4·597 mm.)	NT 5420§	15	A/R					
·169″ (4·293 mm.)	ATJ 7421§	15	A/R				460–24471 on 342–24471 on	
·172″ (4·369 mm.)	ATJ 7420§	15	A/R					
·175″ (4·445 mm.)	ATJ 7419§	15	A/R					
·178″ (4·521 mm.)	ATJ 7418§	15	A/R					
·181″ (4·597 mm.)	ATJ 7417§	15	A/R					
Locking	ATJ 7416§	16	1					
Circlip—bearing	ESC 040	17	1					
Gear—4th and 5th speed	NT 4643§	18	1					



§ Parts peculiar to Tractor only

See title-page for application

†Revised Information. Issue 2

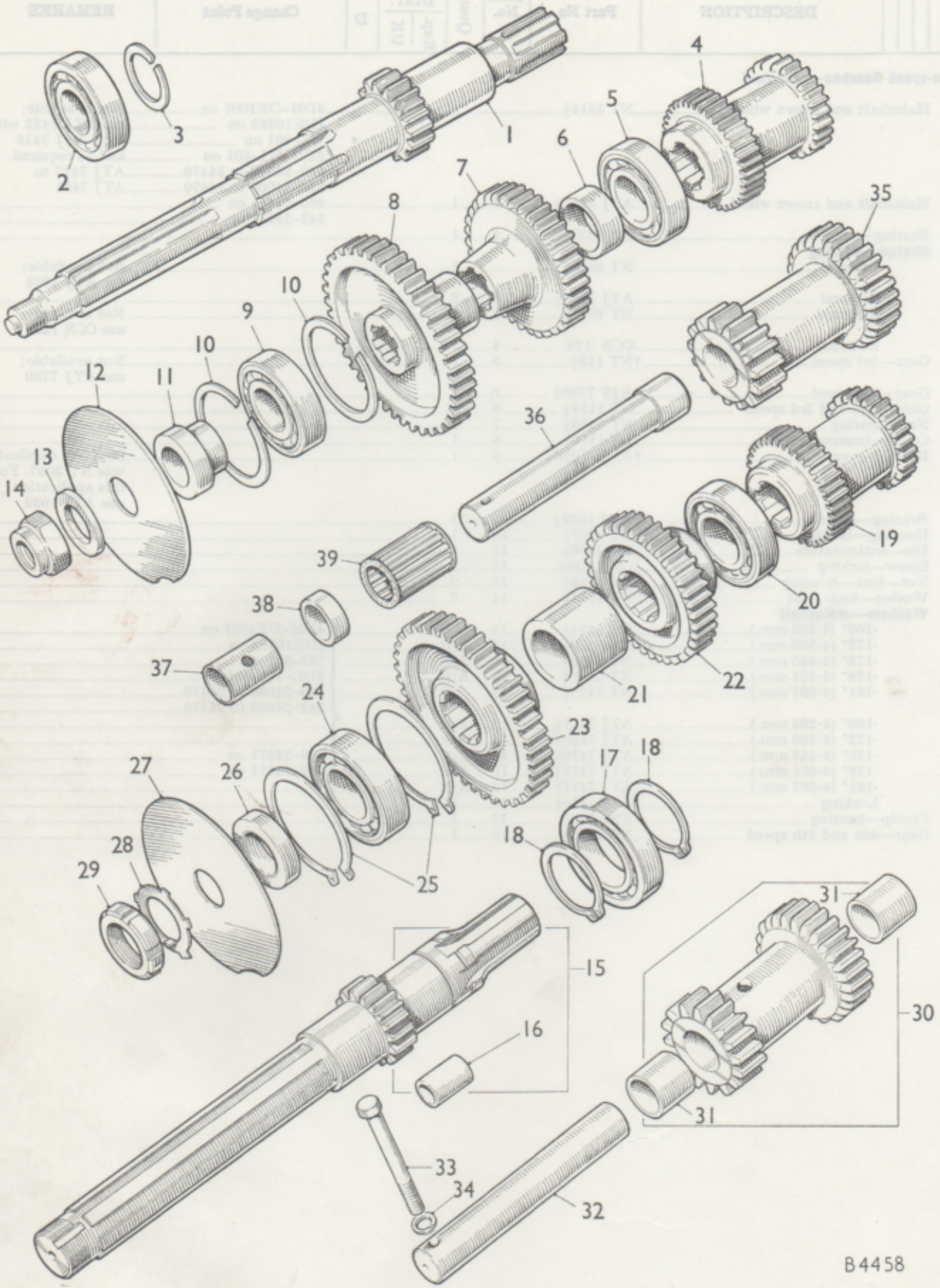
1
2
3
4
5
6
7
8
9
10
10
11
12
13
14
35
36
19
20
21
22
39
38
37
24
23
27
26
25
17
18
18
28
29
15
16
31
31
30
33
34
32
B4458

DESCRIPTION	Part No.	Illus. No.	Quantity	Stock recommds. DIST. Exp.	Stock recommds. DIST. UK	Stock recommds. D	Change Point	REMARKS
Five-speed Gearbox—*continued*								
Layshaft	NT 4953§	1	1	★	★			
Bearing—rear	6K 538	2	1	★	★			Part No. change; was ATJ 1019
Circlip—bearing	NT 3020§	3	1					
Gear—2nd and 3rd speed	NT 1106§	4	1	★	★			
Bearing—centre	6K 538	5	1	★	★			Part No. change; was ATJ 1019
Piece—distance—bearing	NT 1172§	6	1					
Gear—4th speed	NT 1746§	7	1	★	★		(G) U17508 to U34909	
Gear—constant mesh	NT 3331§	8	1	★	★			
Bearing—front	6K 538	9	1	★	★			Part No. change; was ATJ 1019
Circlip—bearing	NT 4016§	10	2					
Sleeve—bearing	NT 1181§	11	1					
Thrower—oil	NT 1182§	12	1					
Washer—lock—layshaft	ATJ 9351§	13	1					
Nut—lock—layshaft	FNN 112	14	1					
Layshaft sub-assembly	ATJ 7103§	15	1	★	★			
Layshaft	NT 8210§		1					No longer available
Bush—spigot	ATJ 6053§	16	1					
Bearing—rear	ATJ 1020§	17	1	★	★			
Circlip—bearing	ESC 050	18	2				(G) I-34910 on	
Gear—2nd and 3rd speed	NT 6771§	19	1	★	★		4010–501 on	
Bearing—centre	ATJ 1020§	20	1	★	★			
Piece—distance—bearing	NT 6774§	21	1					
Gear								
4th speed	NT 6772§	22	1	★	★			
Constant mesh	NT 6773§	23	1	★	★		4DM–787–501 to 11350 (less 9181 to 10000) 3DL–771–501 to 6960 (less 6753 to 6924)	
Constant mesh	ATJ 7285	23	1	★	★		4DM–787–11351 on (plus 9181 to 10000) 3DL–771–6961 on (plus 6753 to 6924) 460–24000 on 342–24000 on	
Bearing—front	ATJ 1020§	24	1	★	★			
Circlip—bearing	ISC 390	25	2					
Piece—packing	NT 6775§	26	1				(G) I-34910 on	
Thrower—oil	NT 6723§	27	1				(G) 4010–501 on	
Washer—lock—layshaft	NT 6725§	28	1					
Nut—lock—layshaft	NT 6724§	29	1					
Reverse gear	NT 1108§	30	1	★	★			
Bush	NT 3007§	31	2					
Shaft—reverse gear	NT 4955§	32	1					
Bolt—shaft	HBN 0620	33	1					
Washer—spring—bolt	LWN 206	34	1					
Reverse gear	NT 8356§	35	1					Optional alternative
Shaft—reverse gear	NT 8357§	36	1					
Bush—shaft	NT 8358§	37	1					
Spacer	NT 8359§	38	1					
Bearing—needle roller	NT 8360§	39	2					

§ Parts peculiar to Tractor only

See title-page for application

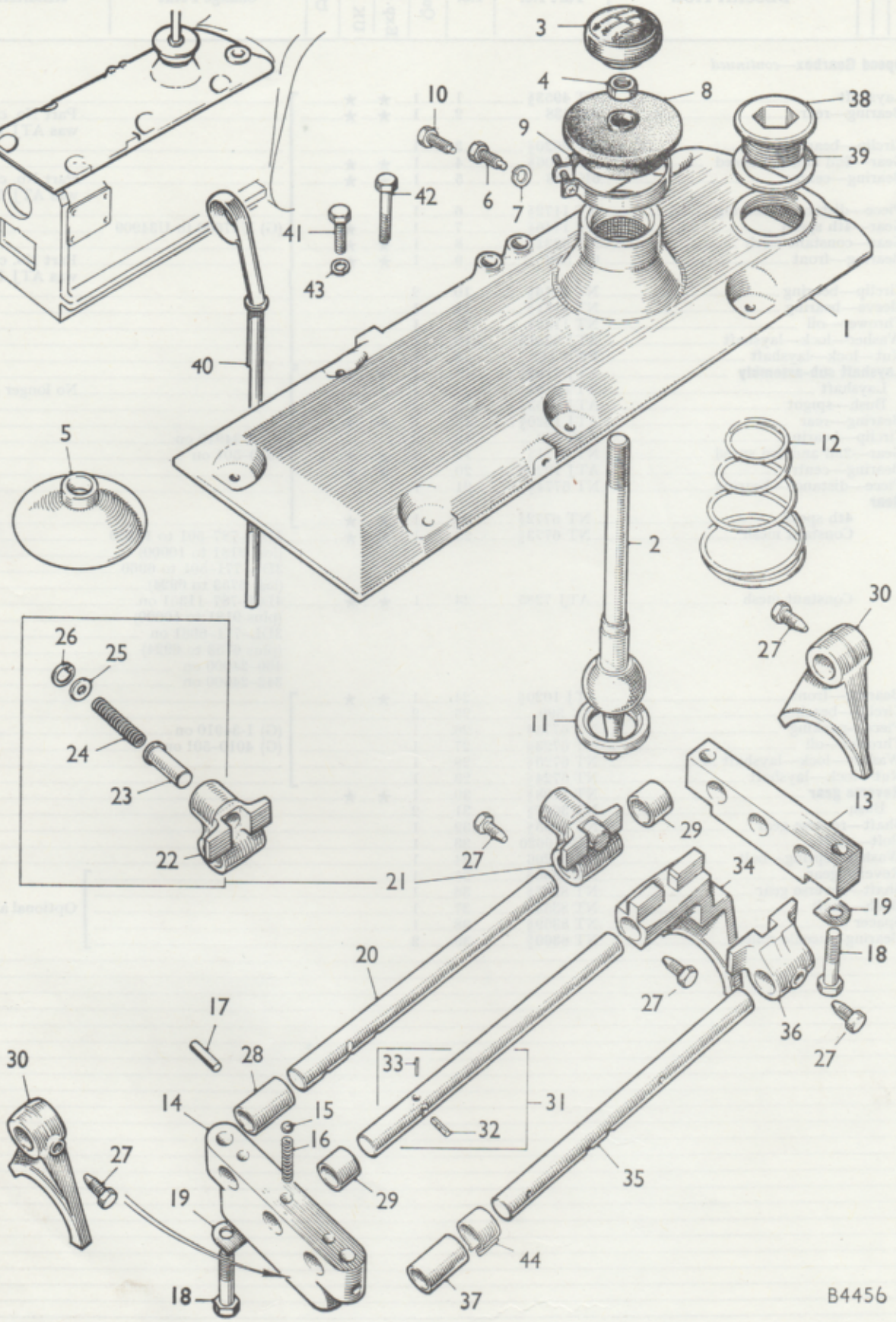

To face page MF 11

DESCRIPTION	Part No.	Illus. No.	Quantity	Stock recommds. DIST. Exp.	Stock recommds. DIST. UK	Stock recommds. D	Change Point	REMARKS
Five-speed Gearbox—*continued*								
Cover assembly—selector and gearbox top	NT 5792§		1				4DM–DE1001 on IDE10388 on 787–501 to 11725 (less 9910 to 10000) 3DL–771–501 to 7333	Not available; use component parts
Cover assembly—selector and gearbox top	ATJ 7379§		1				4DM–787–11726 on (plus 9910 to 10000) 3DL–771–7334 on 460–24000 on 342–24000 on	
Cover—gearbox top	NT 6038§		1				4DM–DE1001 on IDE10388 on 787–501 to 11725 (less 9910 to 10000) 3DL–771–501 to 7333	Not available; use ATJ 7156
Cover—gearbox top	ATJ 7156§	1	1				4DM–787–11726 on (plus 9910 to 10000) 3DL–771–7334 on 460–24000 on 342–24000 on	
Lever—change speed	NT 5796§	2	1					
Knob—lever	NT 5804§	3	1					
Nut	FNZ 208	4	1					
Cover—lever	NT 1139§	5	1				4DM–DE1001 on IDE10388 on 787–501 to 11725 (less 9910 to 10000) 3DL–771–501 to 7333	
Pin—lever locating	NT 5806§	6	1					
Washer—spring	LWN 205	7	1					
Gaiter—lever	ATJ 7376§	8	1				4DM–787–11726 on (plus 9910 to 10000) 3DL–771–7334 on 460–24000 on 342–24000 on	
Clip—gaiter	HCS 340	9	1					
Pin—lever locating	†ATJ 7157§	10	1					Correction; was ATJ 5177
Retainer—change speed lever	†NT 1138§	11	1					Correction; was NT 1183
Spring	NT 1134§	12	1					
Block—bearing—selector rod	NT 1140§	13	1					
Block—interlock—selector rod	NT 5201§	14	1					
Ball	BLS 110	15	3					
Spring—ball	ATJ 1003§	16	3					
Plunger—interlock	NT 5025§	17	2					
Bolt—block to top cover	ATJ 1009§	18	4					
Washer—tab—bolt	NT 5202§	19	4					

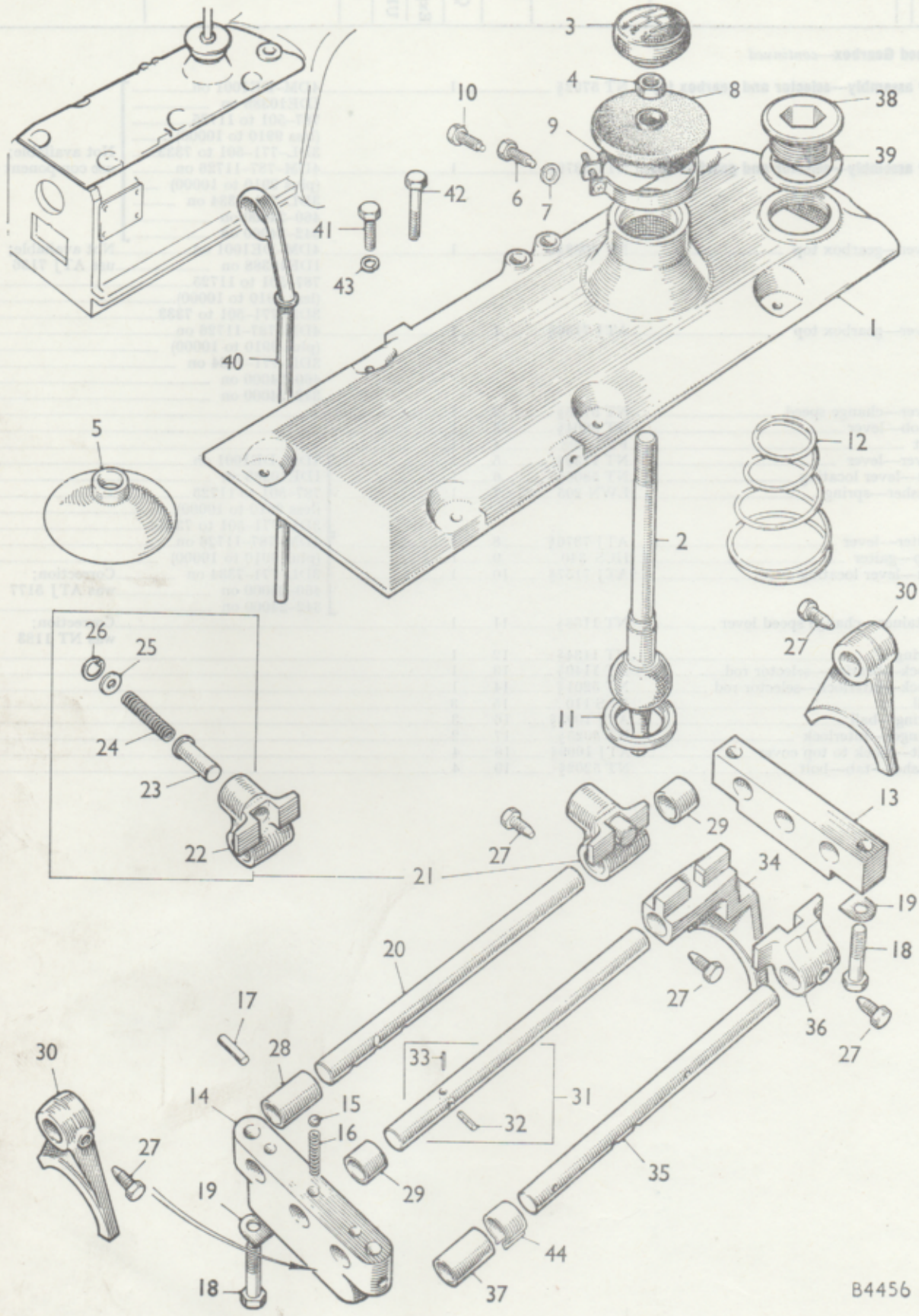

To face page MF 12

DESCRIPTION	Part No.	Illus. No.	Quantity	Stock recommds. DIST. Exp.	Stock recommds. DIST. UK	Stock recommds. D	Change Point	REMARKS
Five-speed Gearbox—*continued*								
Rod—selector—1st and reverse	NT 6096§	20	1					
Jaw and plunger—1st and reverse	NT 6105§	21	1					
Jaw	ATJ 7762§	22	1					Part No. change was NT 6104
Plunger	NT 5994 §	23	1					
Spring	ATJ 1004§	24	1					
Washer—abutment	NT 5995§	25	1					
Circlip	ISC 319	26	1					
Pin—jaw retaining	NT 5798§	27	1					Not available; use ATJ 7775
Pin—jaw retaining	†ATJ 7775§	27	1					
Tube—distance—intermediate	NT 6006§	28	1					
Tube—distance—short	NT 6005§	29	1					
Fork—1st and reverse selector	NT 5797§	30	1					
Pin—fork retaining	NT 5798§	27	1					Not available; use ATJ 7775
Pin—fork locating	†ATJ 7775§	27	1					
Rod—selector—2nd and 3rd	NT 5175§	31	1					
Pin—interlock	NT 5024§	32	1					
Pin—locking	ATJ 1034§	33	1					
Fork—selector—2nd and 3rd	ATJ 7760§	34	1					Part No. change was NT 6102
Pin—fork locating	NT 5798§	27	1					Not available; use ATJ 7775
Pin—fork locating	†ATJ 7775§	27	1					
Tube—distance—short	NT 6005§	29	1					
Rod—selector—4th and 5th	NT 6114§	35	1					
Jaw—selector 4th and 5th	ATJ 7761§	36	1					Part No. change was NT 6103
Pin—jaw retaining	NT 5798§	27	1					Not available; use ATJ 7775
Pin—jaw retaining	†ATJ 7775§	27	1					
Tube—distance—long	NT 6004§	37	1					
Fork—selector—4th and 5th	NT 5797§	30	1					
Pin—fork locating	NT 5798§	27	1					Not available; use ATJ 7775
Pin—fork locating	†ATJ 7775§	27	1					
Plug—gearbox filler	NT 5847§	38	1					
Washer—plain—plug	ATJ 1030§	39	1					
Dipstick—gearbox	NT 5292§	40	1					
Bolt—top cover to gearbox casing	HBN 0610	41	7					
Bolt—top cover to gearbox casing	HBN 0616	42	1					
Washer—spring—bolt	LWN 206	43	8					
Stop—5th speed	NT 6542§	44	1					Fitted on selector when tractor is fitted with 'V' twin front axle or all-metal rear wheels

§ Parts peculiar to Tractor only

See title-page for application

†Revised Information. Issue 3

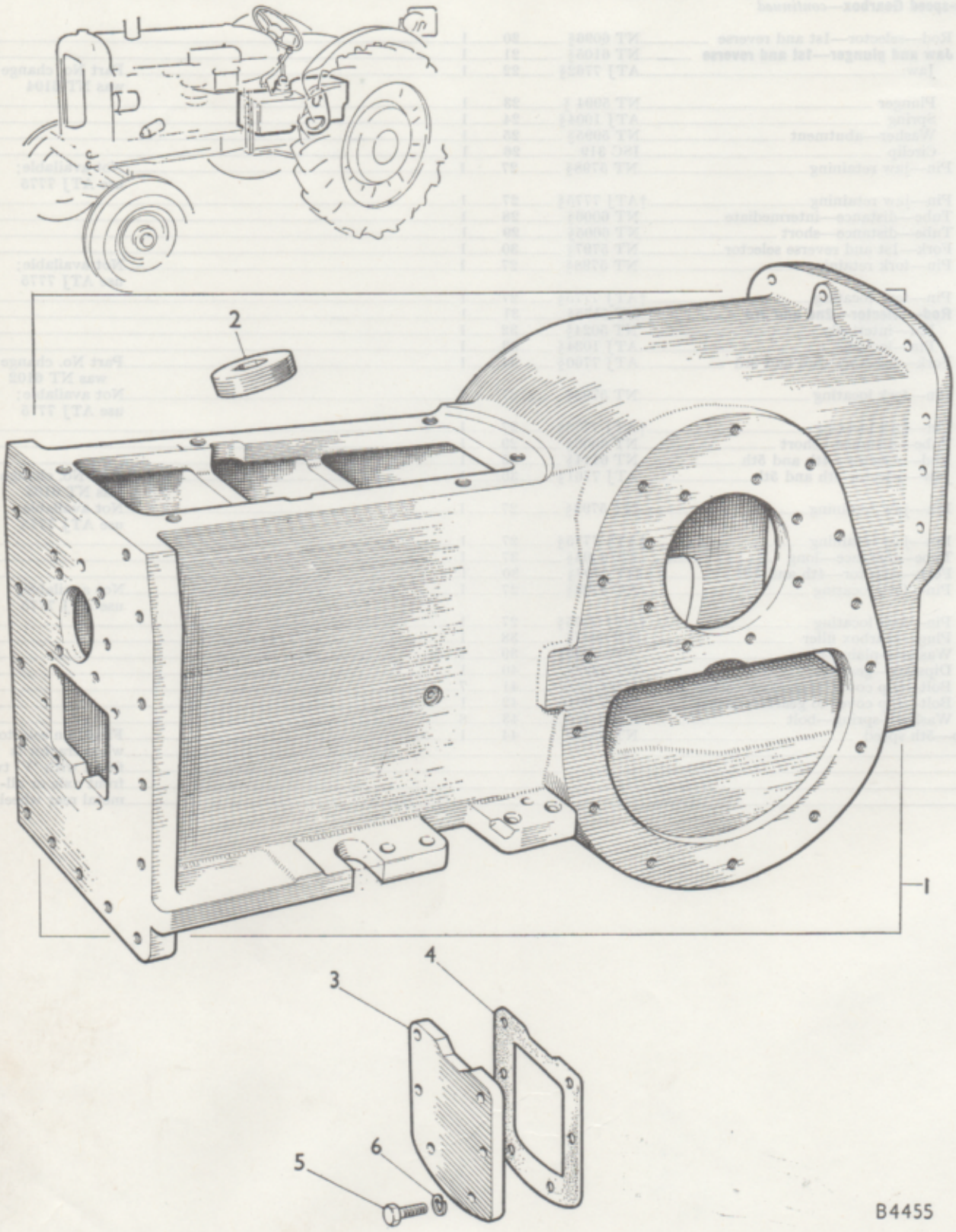
2
1
4
3
6
5
B4455

DESCRIPTION	Part No.	Illus. No.	Quantity	Stock recommds. DIST. Exp.	Stock recommds. DIST. UK	Stock recommds. D	Change Point	REMARKS
TEN-SPEED GEARBOX								
Gearbox assembly	NSP		1					
Casing—gearbox	ATJ 9458§	1	1					
Plug—core	ATJ 7102§	2	2					
Screw—blanking—front casing	HNS 0606		4					
Washer—spring—screw	LWN 206		4					
Cover—front	NT 6738§	3	1				10B 1001 on	
Joint—cover	NT 6739§	4	1	★	★			
Bolt—cover to casing	HBN 0610	5	6					
Washer—spring—bolt	LWN 206	6	6					

§ Parts peculiar to Tractor only

See title-page for application

†Revised Information—Issue 4

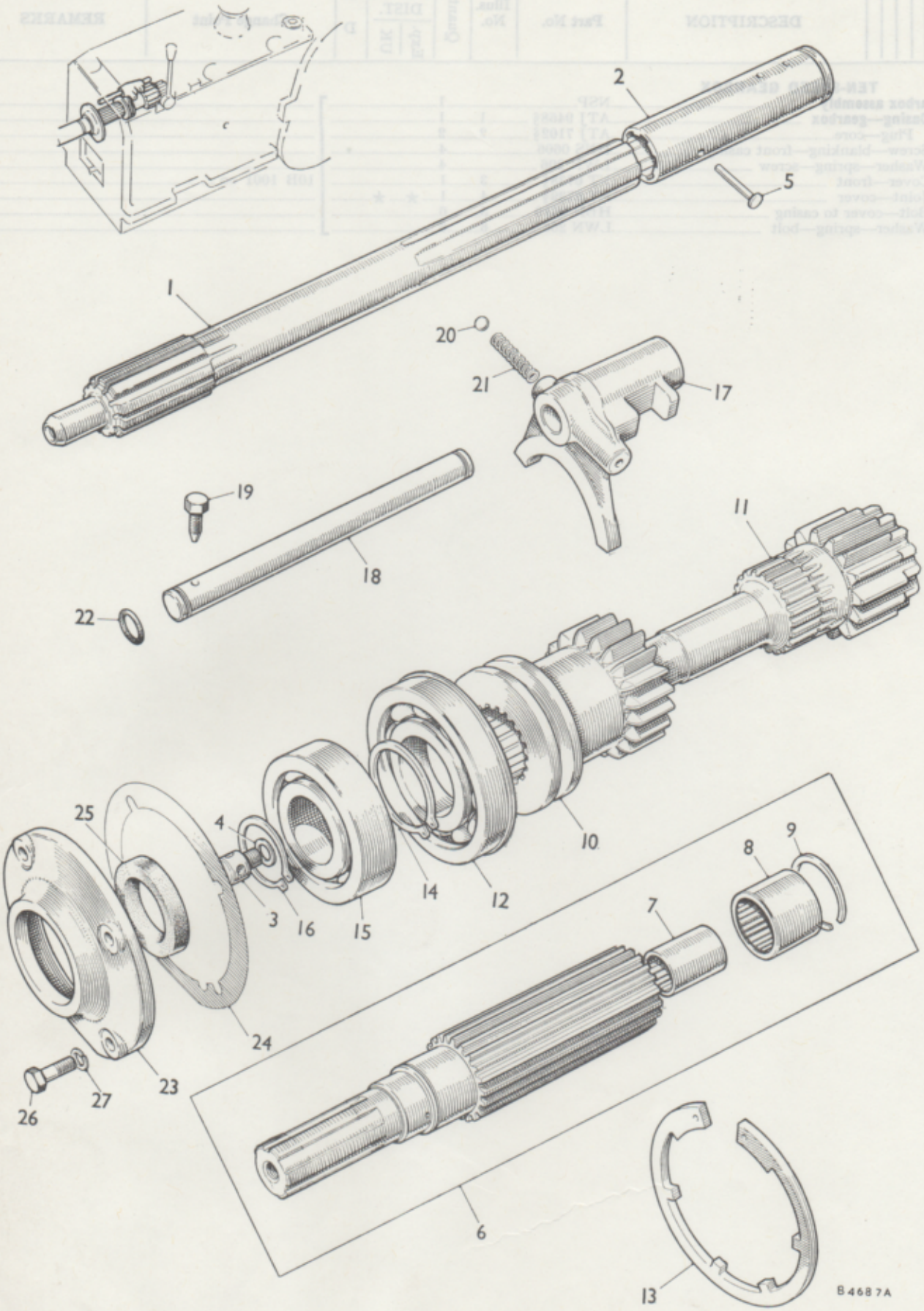

Issue 2

PLATE F 12

To face page MF 14

DESCRIPTION	Part No.	Illus. No.	Quantity	Stock recommds. DIST. Exp.	Stock recommds. DIST. UK	Stock recommds. D	Change Point	REMARKS
Ten-speed Gearbox—*continued*								
Shaft—transmission	NT 8065§	1	1					
Sleeve—driving	ATJ 7363	2	1					
Plug—sleeve	ATJ 7240§	3	1					
Washer—plug (fibre)	ATJ 1027§	4	1					
Pin—clevis	CLZ 0427	5	2					
Shaft assembly—primary	ATJ 7654§	6	1					
Bearing—spigot—front	ATJ 2089§	7	1					
Bearing—spigot—rear	ATJ 2074§	8	1					
Ring—spring	ATJ 1067§	9	1				10B 1001 on	
Gear—sliding	ATJ 7643§	10	1					
Shaft—stub	ATJ 7644§	11	1					
Bearing—stub shaft	ATJ 2060§	12	1					
Circlip	ATJ 2016§	13	1					
Circlip	ATJ 1066§	14	1					
Bearing—primary shaft	6K 777	15	1					
Circlip	ESC 040	16	1					
Fork—selector—sliding gear	ATJ 7527§	17	1					
Shaft—selector—high/low range	†ATJ 7528§	18	1				10B 1001 to 37152	Not available; use ATJ 7900 with ATJ 7901 and ATJ 1090
Shaft—selector—high/low range	†ATJ 7900§	18	1					
Pin—detent	†ATJ 7901§		1				10B 37153 on	
Spring—detent	†ATJ 1090§		1					
Pin—selector shaft	†NT 5798§	19	1					
							10B 1001 on	Not available; use ATJ 7775
Pin—selector shaft	†ATJ 7775§	19	1					
Ball—selector shaft	BLS 110	20	1				10B 1001 to 13752	
Spring—ball	ATJ 1003§	21	1					
'O' ring—selector shaft	TRS 0710	22	1					
Cover—bearing	ATJ 7521§	23	1					
Joint—cover	ATJ 7522§	24	1				10B 1001 on	Not available; use ATJ 7774
Joint—cover	†ATJ 7774§	24	1					
Seal—oil	3H 2129	25	1					
Screw—bearing cover	HNS 0510	26	4					
Washer—spring—screw	LWN 205	27	4					

§ Parts peculiar to Tractor only

See title-page for application

†Revised Information. Issue 2

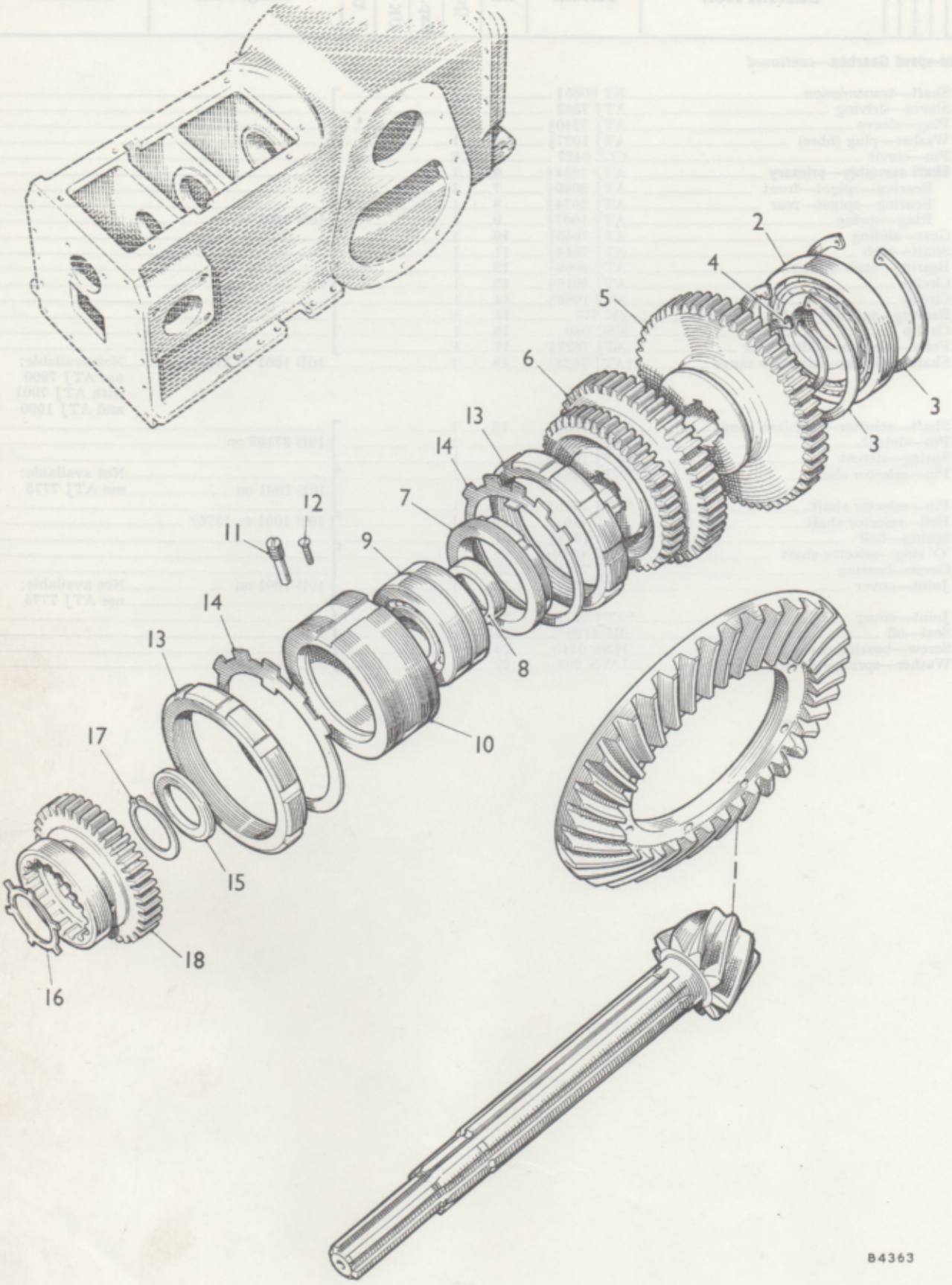
2
4
5
6
3
3
13
14
7
12
11
9
14
13
8
10
17
15
18
16
84363

DESCRIPTION	Part No.	Illus. No.	Quantity	Stock recommds. DIST. Exp. / UK	Stock recommds. D	Change Point	REMARKS
Ten-speed gearbox—*continued*							
Mainshaft and crown wheel	ATJ 7422§	1	1				
Bearing—rear	NT 3059§	2	1				
Circlip—internal	ATJ 1058§	3	2				
Circlip—external	CCN 128	4	1				
Gear—1st speed—mainshaft	†NT 1113§	5	1				Not available; use ATJ 7780
Gear—1st speed—mainshaft	†ATJ 7780§	5	1				
Gear—2nd and 3rd speed—mainshaft	ATJ 7512§	6	1				
Nut—bearing	NT 4958§	7	1				
Collar—bearing thrust	NT 1119§	8	1				
Bearing—centre	†AMK 7016	9	1				Part No. duplication was NT 3057. For this application use ATJ 1089
Bearing—centre	†ATJ 1089§	9	1				
Housing—bearing	NT 4957	10	1				
Pin—anti-rotation	NT 4960§	11	1				
Screw—locking	CMN 0308	12	1			10B 1001 on	
Nut—lock—housing	NT 4959§	13	2				
Washer—lock—nut	NT 1747§	14	2				
Washers—mainshaft							
·169″ (4·293 mm.)	ATJ 7421§	15	A/R				
·172″ (4·369 mm.)	ATJ 7420§	15	A/R				
·175″ (4·445 mm.)	ATJ 7419§	15	A/R				
·178″ (4·521 mm.)	ATJ 7418§	15	A/R				
·181″ (4·597 mm.)	ATJ 7417§	15	A/R				
Locking	ATJ 7416§	16	1				
Circlip—bearing	ESC 040	17	1				
Gear—4th and 5th speed—mainshaft	ATJ 7513§	18	1				

§ Parts peculiar to Tractor only

See title-page for application

† Revised Information. Issue 2

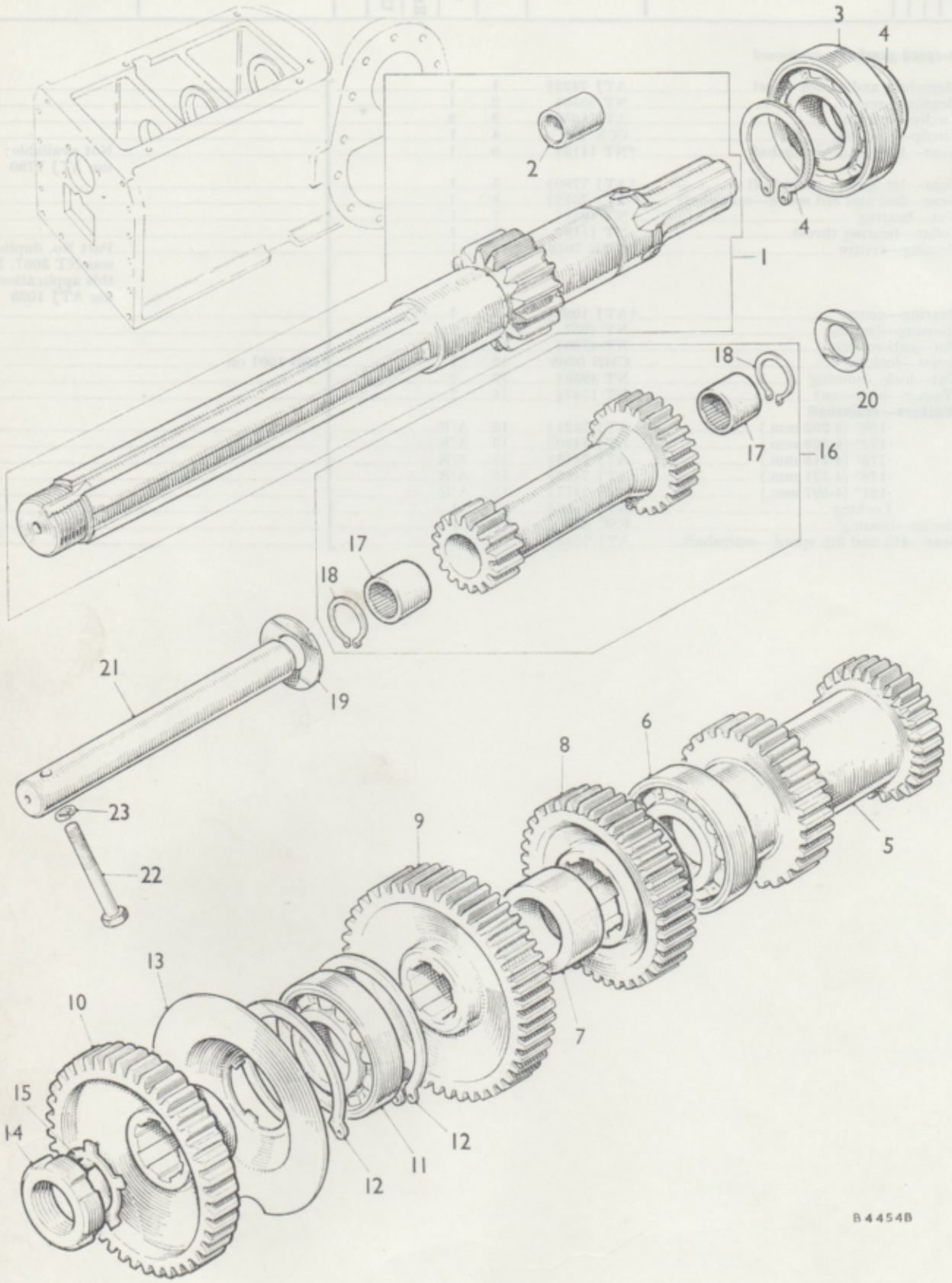
3
4
2
4
1
18
20
17
16
17
18
21
19
6
8
23
9
5
22
13
10
7
15
14
12
11
12
B4454B

DESCRIPTION	Part No.	Illus. No.	Quantity	Stock recommds. DIST. Exp.	Stock recommds. DIST. UK	Stock recommds. D	Change Point	REMARKS
Ten-speed Gearbox—*continued*								
Layshaft sub-assembly	ATJ 7500§	1	1	★	★			
Layshaft	NSP		1					
Bush—spigot	ATJ 6053§	2	1					
Bearing—rear	ATJ 1020§	3	1	★	★			
Circlip—bearing	ESC 050	4	2					
Gear—2nd and 3rd speed—layshaft	ATJ 7504§	5	1	★	★			
Bearing—centre	ATJ 1020§	6	1	★	★			
Distance piece—bearing	NT 6774§	7	1					
Gear—4th speed—layshaft	ATJ 7505§	8	1	★	★			
Gear—constant mesh—low range	ATJ 7506§	9	1	★	★			
Gear—constant mesh—high range	ATJ 7507§	10	1	★	★			
Bearing—front	ATJ 1020 §	11	1	★	★			
Circlip—bearing	ISC 390	12	2				10B 1001 on	
Thrower—oil	ATJ 7631§	13	1					
Nut—lock—layshaft	NT 6724§	14	1					
Washer—lock—nut	NT 6725	15	1					
Reverse gear assembly	ATJ 7508§	16	1	★	★			
Bearing—needle roller	ATJ 2082§	17	2	★	★			
Circlip	ATJ 1068§	18	2					
Washer—thrust	ATJ 7665	19	1					
Washer—thrust	ATJ 7666§	20	1					
Shaft—reverse gear	ATJ 7511§	21	1					
Bolt—shaft	HBN 0618	22	1					
Washer—spring—bolt	LWN 206	23	1					

§ **Parts peculiar to Tractor only** **See title-page for application**

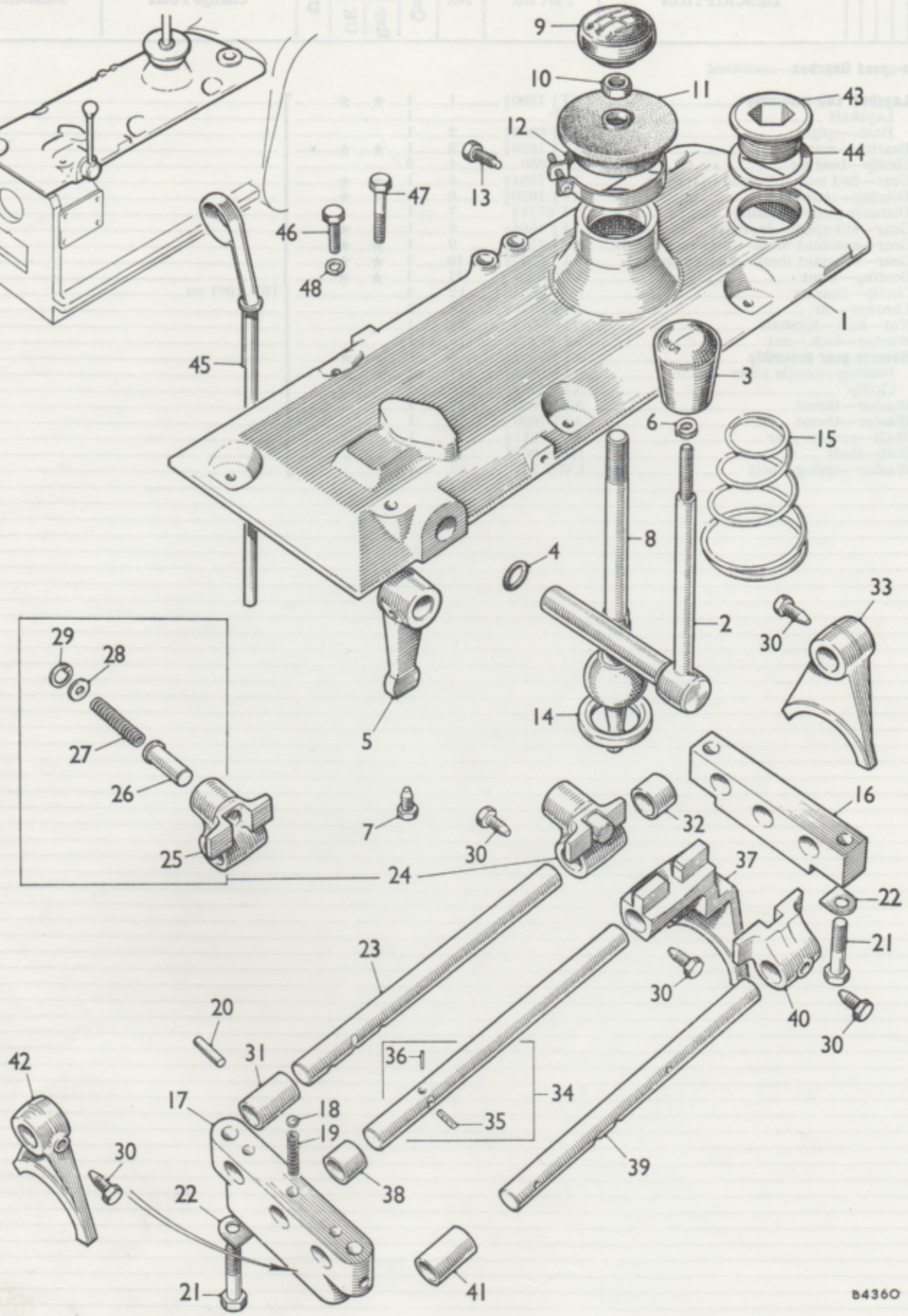

To face page MF 17

Ten-speed Gearbox—*continued*

DESCRIPTION	Part No.	Illus. No.	Quantity	Stock recommds. DIST. Exp.	Stock recommds. DIST. UK	Stock recommds. D	Change Point	REMARKS
Cover—gearbox top	ATJ 7526§	1	1					
Lever—change speed—high/low range	ATJ 7529§	2	1					
Knob—lever	ATJ 7533§	3	1					
'O' ring—lever shaft	TRS 0912	4	1					
Lever—operating—high/low range	ATJ 7532§	5	1					
Washer—thackeray	2K 2562†	6	1					
Pin—operating shaft	ATJ 7384§	7	1					Part No. change; was ATJ 9331
Lever—change speed	NT 5796§	8	1					
Knob—lever	NT 5804§	9	1					
Nut—lock—knob	FNZ 208	10	1					
Gaiter—lever	ATJ 7376§	11	1					
Clip—gaiter	HCS 340	12	1					
Pin—lever locating	ATJ 7157§	13	1					
Retainer—change speed lever	NT 1138§	14	1					
Spring	NT 1134§	15	1					
Block—bearing—selector rod	NT 1140§	16	1					
Block—interlock—selector rod	NT 5201§	17	1					
Ball—selector	BLS 110	18	3					
Spring—ball	ATJ 1003§	19	3					
Plunger—interlock	NT 5025§	20	2					
Bolt—block to top cover	ATJ 1009§	21	4					
Washer—tab—bolt	NT 5202§	22	4					Not available; use ATJ 7773
Washer—tab—bolt	ATJ 7773§	22	4					
Rod—selector—1st and reverse	NT 6096§	23	1					
Jaw and plunger—1st and reverse	NT 6105§	24	1					
Jaw	ATJ 7762§	25	1					Part No. change; was NT 6104
Plunger	NT 5994§	26	1					
Spring	ATJ 1004§	27	1				10B1001 on	
Washer—abutment	NT 5995§	28	1					
Circlip	ISC 319	29	1					Correction; was ISC 5319
Pin—jaw retaining	NT 5798§	30	1					Not available; use ATJ 7775
Pin—jaw retaining	ATJ 7775§	30	1					
Tube—distance—intermediate	NT 6006§	31	1					
Tube—distance—short	NT 6005§	32	1					
Fork—1st and reverse selector	NT 5797§	33	1					
Pin—fork retaining	NT 5798§	30	1					Not available; use ATJ 7775
Pin—fork retaining	ATJ 7775§	30	1					
Rod—selector—2nd and 3rd	NT 5175§	34	1					
Pin—interlock	NT 5024§	35	1					
Pin—locking	ATJ 1034§	36	1					
Fork—selector—2nd and 3rd	ATJ 7760§	37	1					
Pin—fork retaining	NT 5798§	30	1					Part No. change; was NT 6102
Pin—fork retaining	ATJ 7775§	30	1					Not available; use ATJ 7775
Tube—distance—short	NT 6005§	38	1					
Rod—selector—4th and 5th	NT 6114§	39	1					
Jaw—selector—4th and 5th	ATJ 7761§	40	1					
Pin—jaw retaining	NT 5798§	30	1					Part No. change; was NT 6103
Pin—jaw retaining	ATJ 7775§	30	1					Not available; use ATJ 7775
Tube—distance—long	NT 6004§	41	1					
Fork—selector—4th and 5th	NT 5797§	42	1					
Pin—fork retaining	NT 5798§	30	1					
Pin—fork retaining	ATJ 7775§	30	1					Not available; use ATJ 7775
Plug—gearbox filler	NT 5847§	43	1					
Washer—plain—plug	ATJ 1030§	44	1					
Dipstick—gearbox	NT 5292§	45	1					
Bolt—top cover to gearbox	HBN 0610	46	7/6					
Bolt—top cover to gearbox	HBN 0616	47	2/1					Quantity reduced at 10B 37152
Washer—spring—bolt	LWN 206	48	8					
Stud—top cover to gearbox	†ATJ 7916§		1					
Bracket	†ATJ 7915§		1					
Spring	†BTJ 239§		1				10B 37153 on	See Technical Information Bulletin Tractor/94
Nut—lock	†LNN 206		1					
Nut—lock	†FNN 606		1					

§ Parts peculiar to Tractor only

See title-page for application

† Revised Information. Issue 5

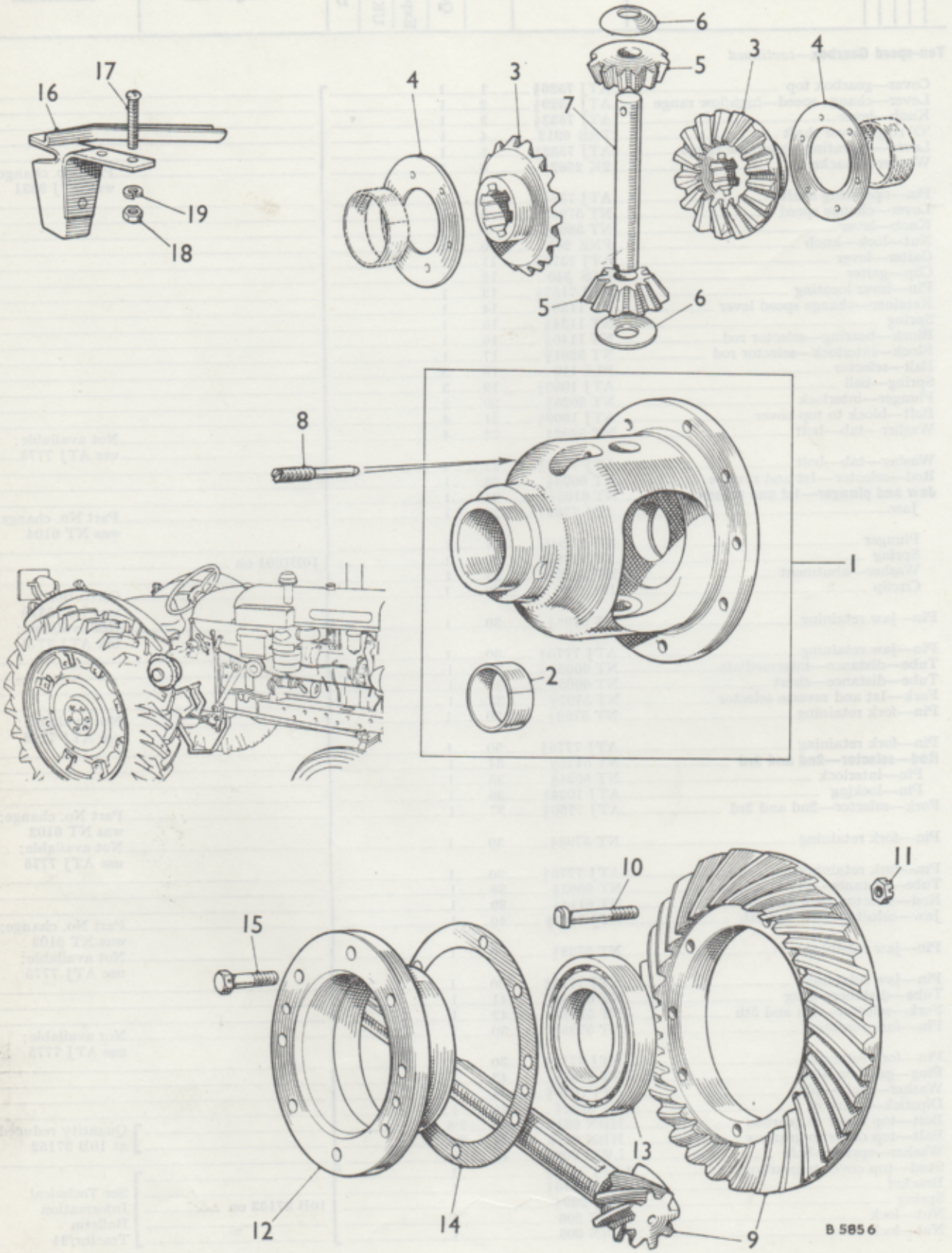
6
5
3
4
17
16
4
3
7
19
18
5
6
8
1
2
10
11
15
13
12
14
9
B 5856

DESCRIPTION	Part No.	Illus. No.	Quantity	Stock recommds. DIST. Exp.	Stock recommds. DIST. UK	Stock recommds. D	Change Point	REMARKS
DIFFERENTIAL								
Differential assembly	NT 5920§		1					Not available; use component parts
Differential sub-assembly	NT 5914§		1					
Housing—differential	†NT 5915§	1	1					Not available; use ATJ 7183
Housing—differential	†ATJ 7183§	1	1					
Bush	NT 4694§	2	2				IDE10388 on	
Gear	NT 1154§	3	2				787–501 on	
Washer—thrust—gear	NT 3077§	4	2				3DL–771–501 on	
Pinion	†NT 5144§	5	2				460–24000 to 38249 (less 38173 to 38192)	Not available; use ATJ 7803 with 1 off
							342–24000 to 38249 (less 38173 to 38192)	ATJ 7776
Washer—thrust—pinion	NT 5145§	6	2					
Shaft—pinion	NT 5155§		1					Not available; use ATJ 7495
Shaft—pinion	ATJ 7495§	7	1					
Pin–pinion shaft	NT 5917§	8	1					
Mainshaft and crown wheel	NT 5814§		1				4DM–DE1001 on	Not available;
							IDE10388 on	use ATJ 7422
							787–501 on	For details see
							3DL–771–501 on	page MF 9
							460–24000 to 24470	
							342–24000 to 24470	
Mainshaft and crown wheel	ATJ 7422§	9	1				460–24471 to 38249 (less 38173 to 38192)	
							342–24471 to 38249 (less 38173 to 38192)	
Bolt—crown wheel	NT 5812§	10	8					
Nut—bolt	FNN 307	11	8					
Housing—bearing	NT 5922§	12	2					
Bearing	NT 4696§	13	2				4DM–DE1001 on	
Shims—bearing housing							IDE10388 on	
·003″ (·076 mm.)	NT 1187§	14	A/R				787–501 on	
·010″ (·254 mm.)	NT 1188§	14	A/R				3DL–792–501 on	
·025″ (·635 mm.)	NT 1189§	14	A/R				460–24000 to 38249 (less 38173 to 38192)	
Bolt—bearing housing to gearbox	ATJ 1007§	15	16				342–24000 to 38249 (less 38173 to 38192)	Not available; use ATJ 3219 with 1 off ATJ 3223, 2 off PMN 0407 and 2 off LWN 204
Catcher—oil	†NT 5453§	16	1					
Screw—oil catcher to gearbox	†NT 5846§	17	2					
Nut—screw	†FNN 105	18	2					
Washer—spring—nut	†LWN 305	19	2					

§ Parts peculiar to Tractor only

See title-page for application

†Revised Information. Issue 4

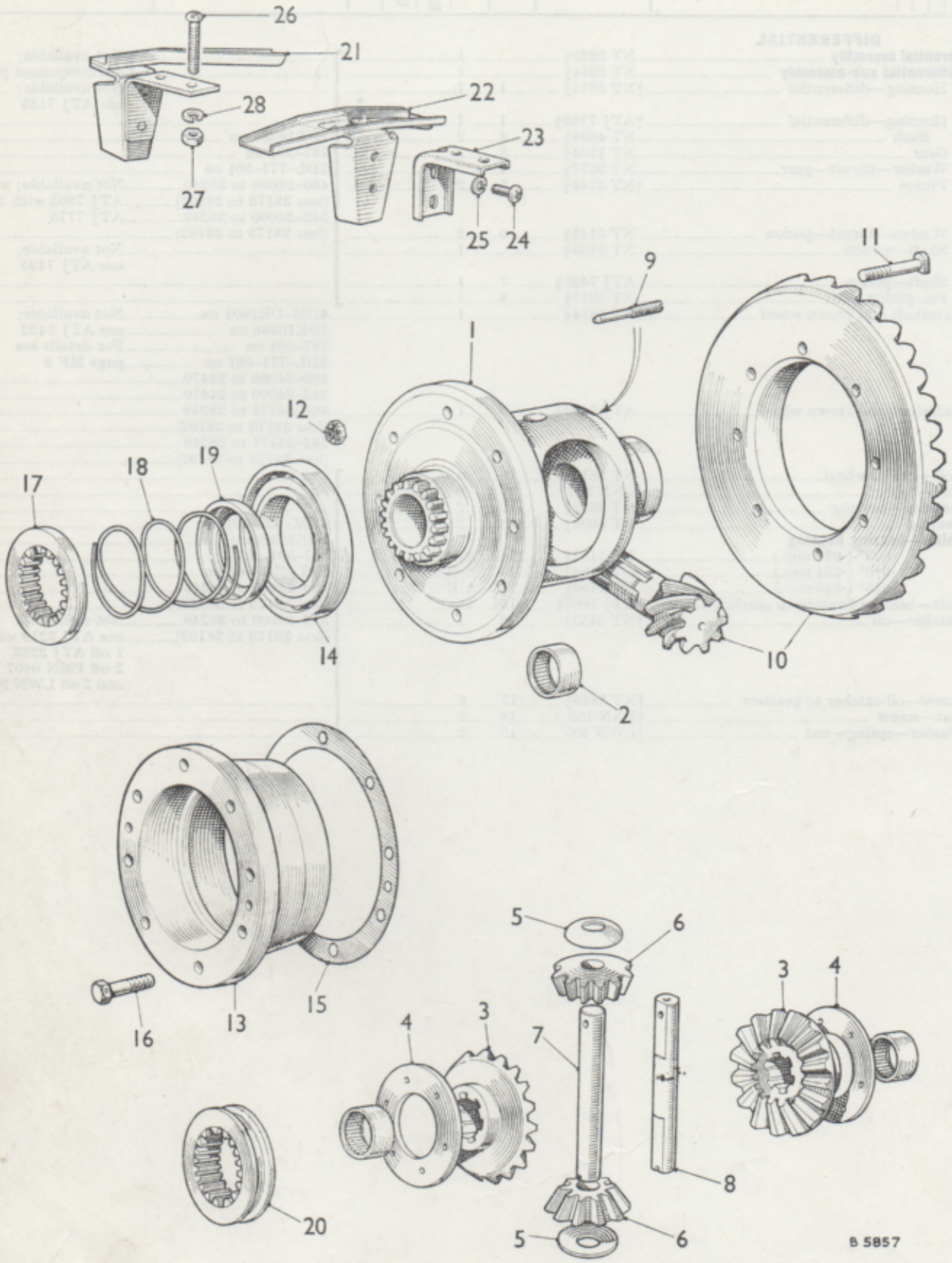
26
21
28
22
23
27
25
24
11
9
1
12
18
19
17
14
10
2
5
6
3
4
7
4
3
16
13
15
8
20
5
6
B 5857

DESCRIPTION	Part No.	Illus. No.	Quantity	Stock recommds. DIST. Exp. / UK	Stock recommds. D	Change Point	REMARKS
Differential—*continued*							
Housing—differential	†ATJ 7446§	1	1			342–38250 on	Not available; use ATJ 7801 with 3 off ATJ 1076
						(plus 38173 to 38192)	
						460–38250 on	
Bearing—needle roller	†ATJ 2011§	2	2			(plus 38173 to 38192)	
Gear	†ATJ 7437§	3	2			10/42–57420 to 90218	
Washer—thrust—gear	†NT 3077§	4	2			10/60–57420 to 90218	
Washer—thrust—pinion	†NT 5145§	5	2				
Housing—differential	†ATJ 7801§	1	1			342–38250 on	
Ring—spring	†ATJ 1076§		3			(plus 38173 to 38192)	
Bearing—needle roller	†ATJ 2011§	2	2			460–38250 on	
Gear	†ATJ 7437§	3	2			(plus 38173 to 38192)	
Washer—thrust—gear	†NT 3077§	4	2			10/42–90219 on	
Washer—thrust—pinion	†NT 5145§	5	2			10/60–90219 on	
Pinion	†NT 5144§	6	2			342–38250 on	Not available; use ATJD 7803 with 1 off ATJ 7776
						(plus 38173 to 38192)	
						460–38250 on	
Shaft—pinion	ATJ 7495§	7	1			(plus 38173 to 38192)	
						10/42–57420 to	
						(G) 10B 11137	
						10/60–57420 to	
						(G) 10B 11137	
Pinion	†ATJ 7720§	6	2			(G) 10B 11138 to 21190	Not available; use ATJ 7803 and ATJ 7776
Shaft—pinion	†ATJ 7719	8	1			(G) 10B 11138 to 21190	
Pinion	†ATJ 7778§	6	2			(G) 21191 to 33228	Not available; use ATJ 7803
	†ATJ 7797§	6	2				
	†ATJ 7803§	6	2			(G) 33229 on	
Shaft—pinion	ATJ 7776§	8	1			(G) 10B 21191 on	
Pin—pinion shaft	NT 5917§	9	1				
Mainshaft and crown wheel	ATJ 7422§	10	1 pr				
Bolt—crown wheel	NT 5812§	11	8				
Nut—bolt	FNN 307	12	8			342–38250 on	
Housing—bearing	ATJ 7667§	13	2			(plus 38173 to 38192)	
Bearing	ATJ 7067§	14	2			460–38250 on	
						(plus 38173 to 38192)	
						10/42–57420 on	
Shim—bearing housing						10/60–57420 on	
·003″ (·076 mm.)	NT 1187§	15	A/R				
·010″ (·254 mm.)	NT 1188§	15	A/R				
·025″ (·635 mm.)	NT 1189§	15	A/R				
Ball-bearing housing	ATJ 1007§	16	16				
Ring—locking—differential lock	ATJ 7377§	17	1			342–38250 to 55560	
Spring—release	ATJ 7378§	18	1			(plus 38173 to 38192)	
Cup—spring locating	ATJ 7277§	19	1			460–38250 to 55560)	
						(plus 38173 to 38192)	
Ring—locking—differential lock	ATJ 7542§	20	1			342–55561 on	
						460–55561 on	
						10/42–57420 on	
						10/60–57420 on	
Catcher—oil	NT 5453§	21	1			342–38250 on	Not available; use ATJ 3219 with 1 off ATJ 3223, 2 off PMN 0407 and 2 off LWN 204
						(plus 38173 to 38192)	
						460–38250 on	
						(plus 38173 to 38192)	
						10/42–57420 to	
						(G) 10B 11137	
						10/60–57420 to	
						(G) 10B 11137	
Catcher—oil	ATJ 3219§	22	1				
Bracket—oil catcher	ATJ 3223§	23	1			10/42–(G) 10B 11138 on	
Screw—bracket to oil catcher	PMN 0407	24	2			10/60–(G) 10B 11138 on	Correction; was PMN 0401
Washer—spring—screw	LWN 204	25	2				
Screw—oil catcher to gearbox	NT 5846§	26	2			342–38250 on	
Nut—screw	FNN 105	27	2			(plus 38173 to 38192)	
Washer—spring—nut	LWN 305	28	2			460–38250 on	
						(plus 38173 to 38192)	
						10/42–57420 on	
						10/60–57420 on	

§ Parts peculiar to Tractor only

See title-page for application

†Revised Information. Issue 4

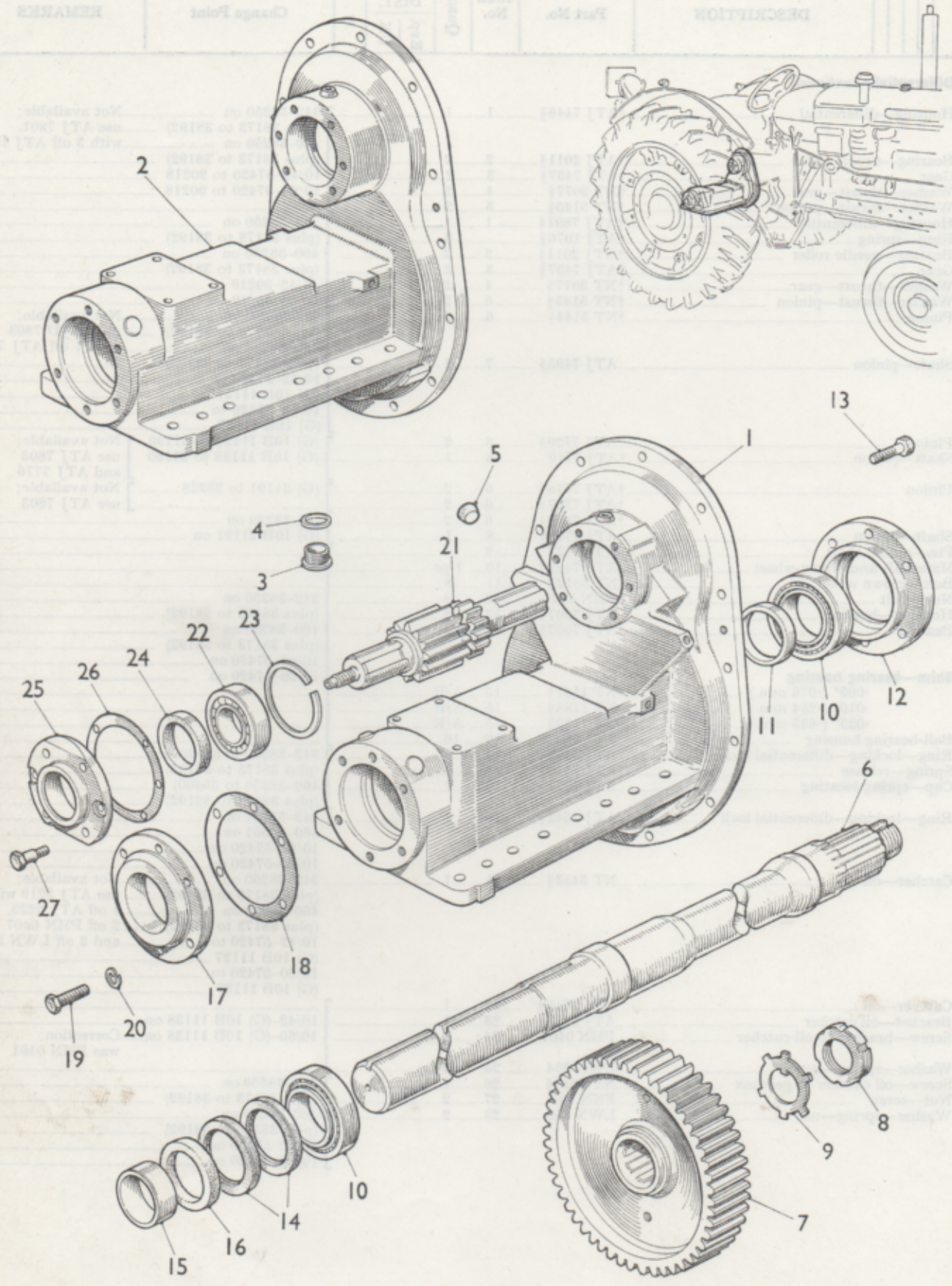
2
13
1
5
4
21
3
22
23
24
26
25
11
10
12
6
27
18
17
20
19
9
8
10
14
16
15
7
B4865

DESCRIPTION	Part No.	Illus. No.	Quantity	Stock recommds. DIST. Exp.	Stock recommds. DIST. UK	Stock recommds. D	Change Point	REMARKS
REAR AXLE								
Rear axle assemblies								
Right hand	NT 5816§		1				DE1001 to 5936	Not available; use component parts
Left hand	NT 5815§		1					
	NT 7308§		2				DE 5937 to 10387	
Casing—rear axle	NT 6080§	1	2				DE1001 to 5936	
Casing—rear axle	NT 7307§	2	2				DE5937 to 10387	
Plug—drain	NT 5847§	3	2				DE1001 to 10387	
Washer—plain—plug	ATJ 1030§	4	2					
Plug—axle casing (cork)	NT 3145§	5	2				DE1001 to 5936	
Shaft—axle	NT 6113§	6	2	★	★			
Shaft—axle—heavy duty	ATJ 7248§	6	2					Optional alternatives
Shaft—axle—special	NT 5863§	6	2					
Gear—final drive	†NT 7181§		2					Not available; use ATJ 9490 with ATJ 9491
	†ATJ 9397§	7	2					
	†ATJ 9490§	7	2					
Nut—lock—axle shaft	NT 5820§	8	2					Not available; use ATJ 7311 with 1 off ATJ 7312
Washer—lock—nut	NT 3065§	9	2					
Bearing—inner and outer	NT 3061§		4					Not available; use 2K 6008
Bearing—inner and outer	2K 6008	10	4	★	★			
Piece—distance—bearing	**4DM** NT 6009§	11	4					
Housing—inner bearing	NT 5970§	12	2				DE1001 to 10387	
Bolt—housing to axle casing	ATJ 9367§	13	12					
Seal—oil	NT 3076§	14	4	★	★			
Collar—oil seal	NT 1167§	15	2					
Washer (felt)	NT 3069§	16	2					
Cover—axle end	NT 6497§	17	2					
Shims—end cover								
·003″ (·076 mm.)	NT 1191§	18	A/R					
·010″ (·254 mm.)	NT 1192§	18	A/R					
·025″ (·635 mm.)	NT 1193§	18	A/R					
Bolt—end cover	HBN 0712	19	12					
Washer—spring—bolt	LWN 207	20	12					
Pinion—final drive	†ATJ 7187§	21	2					Not available; use ATJ 9491 with ATJ 9490
Pinion—final drive	†ATJ 9491§	21	2					
Bearing—pinion	ATJ 1000§	22	2	★	★			Not available; use ATJ 2098
Bearing—pinion	†ATJ 2098§	22	2					Correction; was ATJ 2089
Circlip—bearing	NT 4017§	23	2					
Seal—oil	NT 3073§	24	2	★	★			Not available; use ATJ 7651
Seal—oil	ATJ 7651§	24	2					
Cover—pinion bearing	NT 5304§	25	2				DE1001 to 5936	
Cover—pinion bearing	NT 7177§	25	2				DE5937 to 10387	
Shim—cover	NT 1331§	26	A/R				DE1001 to 10387	
Dowel screw	NT 5822§	27	4				DE1001 to 5936	
Dowel screw	NT 7309§	27	4				DE5937 to 10387	

§ Parts peculiar to Tractor only

See title-page for application

†Revised Information—Issue 3

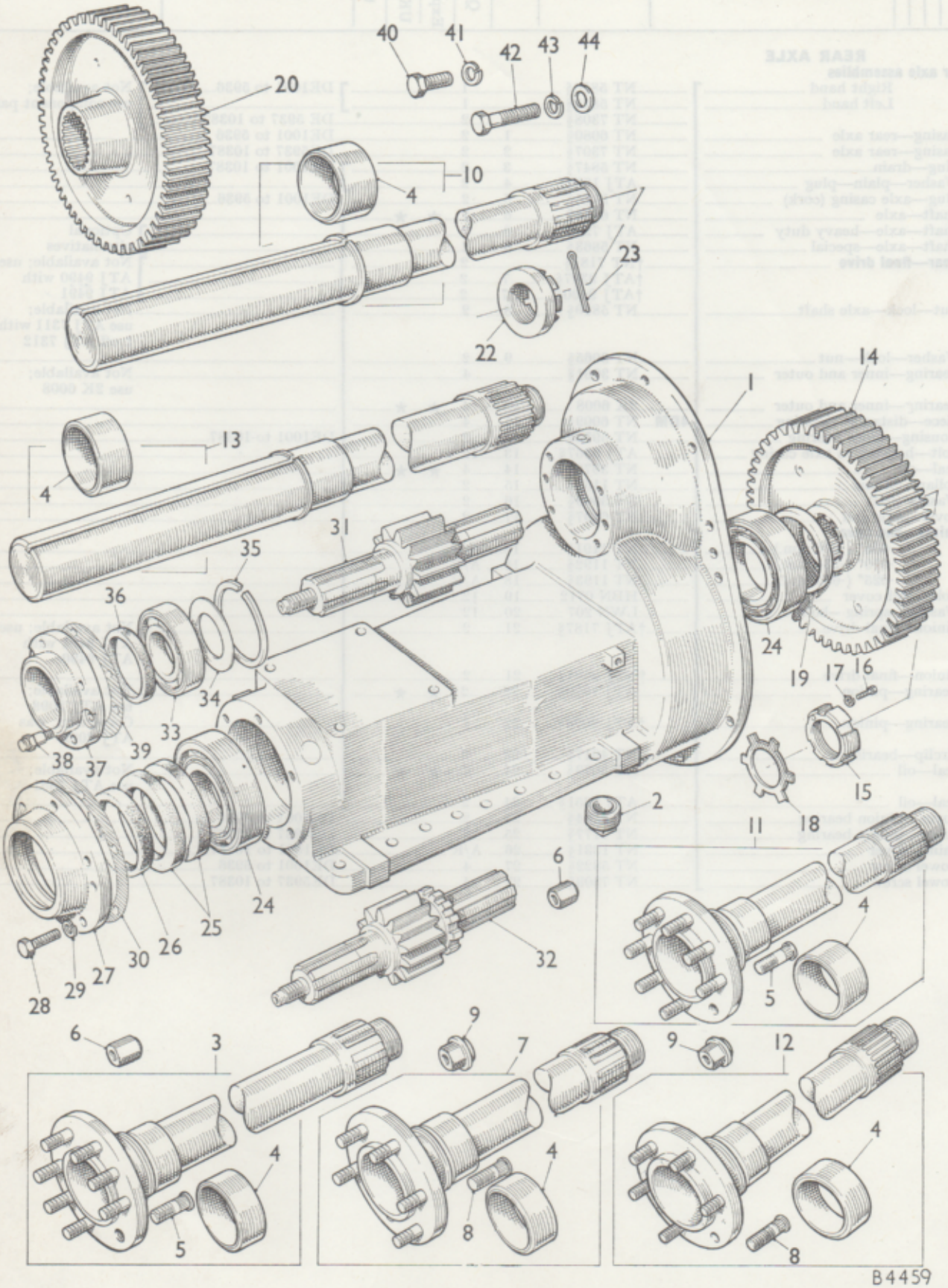
40
41
42
43
44
20
10
4
23
22
14
1
13
4
31
35
36
34
33
39
38
37
24
19
17
16
15
18
2
11
6
4
5
32
25
26
30
27
29
28
6
3
4
5
9
7
4
8
9
12
4
8
B4459

DESCRIPTION		Part No.	Illus. No.	Quantity	Stock recommds. DIST. Exp.	Stock recommds. DIST. UK	Stock recommds. D	Change Point	REMARKS
Rear Axle—*continued*									
Rear axle assembly									
Sliding hub	**3DL**	NT 8103§		2				4DM–IDE10388 on	
Flanged hub	**4DM**	NT 7350§		2				787–501 to 22800	
		ATJ 7268§		2				(less 13111 to 20000)	
								792–501 to 12451	
								(less 5621 to 10000)	
								3DL–771–501 to 9785	Not available; use component parts
								772–501 to 2998	
Sliding hub	**3DL, 342**	ATJ 7406§		2				4DM–787–22801 on	
Flanged hub	**4DM, 460**	ATJ 9398§		2				(plus 13111 to 20000)	
		ATJ 7405§		2				792–12452 on	
								(plus 5621 to 10000)	
								3DL–771–9786 on	
								772–2999 on	
								460–24000 to 38249	
								(less 38173 to 38192)	
								342–24000 to 38249	
								(less 38173 to 38192)	
Casing—rear axle		NT 7179§	1	2				4DM–IDE10388 on	
Plug—drain		ADP 116	2	2				787–501 on	
								792–501 on	
								3DL–771–501 on	
								772–501 on	
								460–24000 to 38249	
								(less 38173 to 38192)	
								342–24000 to 38249	
								(less 38173 to 38192)	
Shaft assembly—axle		NT 8278§	3	2	★	★			
Sleeve		NT 7244§		2					Not available; use ATJ 7056
	3DL								
Sleeve		ATJ 7056§	4	2					
Stud—wheel		NT 8299§	5	16	★	★			
Nut—wheel stud		NT 8321§	6	16	★	★			
Shaft assembly—axle—flanged hub		ATJ 7267§	7	2	★	★		4DM–IDE10388 on	
Sleeve		NT 7244§		2				787–501 to 22800	Not available; use ATJ 7056
								(less 13111 to 20000)	
Sleeve		ATJ 7056§	4	2				792–501 to 12451	
Stud—wheel		NT 7184§	8	12	★	★		(less 5621 to 10000)	
Nut—wheel stud		NT 7202§	9	12	★	★		3DL–771–501 to 9785	
Shaft assembly—axle—sliding hub	**4DM**	NT 7246§	10	2	★	★		772–561 to 2899	
Sleeve		†NT 7244§		2					Not available; use ATJ 7056 Correction was ATJ 7058
Sleeve		ATJ 7056§	4	2					
Shaft—axle—sliding hub		ATJ 9428§		2					Alternative shafts, no longer available
Shaft—axle—flanged hub		ATJ 9427§		2					
Shaft assembly—axle		†ATJ 7260§	11	2	★	★		4DM–787–22801 on	Not available; use ATJ 7684 with 1 off nut ATJ 7673
Sleeve	**3DL, 342**	ATJ 7056§	4	2				(plus 13111 to 20000)	
Stud—wheel		NT 8299§	5	16	★	★		792–12452 on	
Nut—wheel stud		NT 8321§	6	16	★	★		(plus 5621 to 10000)	
Shaft assembly—axle—flanged hub		†ATJ 7227§	12	2	★	★		3DL–771–9786 on	Not available; use ATJ 7675 with 1 off nut ATJ 7673
Sleeve		ATJ 7056§	4	2				772–2999 on	
Stud—wheel	**4DM, 460**	NT 7184§	8	12	★	★		4602–4000 to 38249	
Nut—wheel stud		NT 7202§	9	12	★	★		(less 38173 to 38192)	
Shaft assembly—axle—sliding hub		ATJ 7262§	13	2	★	★		342–24000 to 38249	
								(less 38173 to 38192)	Not available; use ATJ 7686 with 1 off nut ATJ 7673
Sleeve		ATJ 7056§	4	2					

§ Parts peculiar to Tractor only

See title-page for application

†Revised Information—Issue 3

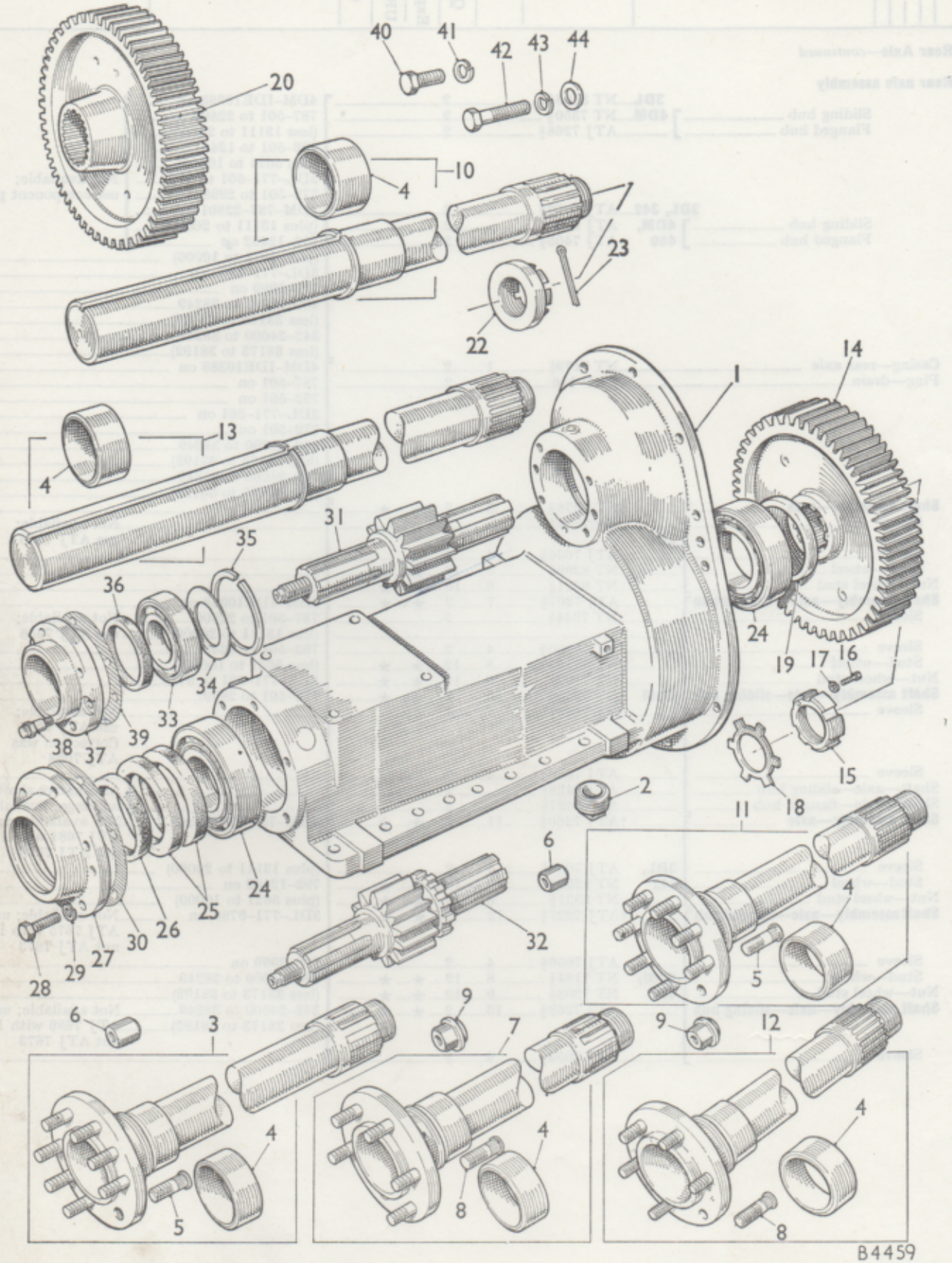
40
41
42
43
44
20
10
4
23
22
14
1
13
4
31
35
36
24
19
17
16
34
33
39
38
37
15
18
2
11
6
24
25
26
30
27
29
28
32
4
5
6
3
9
7
9
12
4
5
4
8
4
8
B4459

DESCRIPTION	Part No.	Illus. No.	Quantity	Stock recommds. DIST. Exp.	Stock recommds. DIST. UK	Stock recommds. D	Change Point	REMARKS
Rear Axle—*continued*								
Gear—final drive	†NT 7181§		2					Correction, was ATJ 7181, WSE use ATJ 9490 with ATJ 9491
	ATJ 9397§	14	2					
	ATJ 9490§	14	2					
Nut assembly—axle shaft	ATJ 9389§		2					WSE use component parts
Nut—axle shaft	ATJ 7311§	15	2					
Screw—nut	ATJ 7312§	16	2					
Washer—spring—screw	LWN 205	17	2					
Washer—lock—nut	NT 7162§	18	2					
Washers—accommodation								
·208″ (5·283 mm.)	ATJ 9399§	19	A/R					
·212″ (5·385 mm.)	ATJ 9400§	19	A/R					
·216″ (5·486 mm.)	ATJ 9401§	19	A/R					
·220″ (5·588 mm.)	ATJ 9402§	19	A/R					
·224″ (5·690 mm.)	ATJ 9403§	19	A/R					
·228″ (5·791 mm.)	ATJ 9404§	19	A/R					
·232″ (5·893 mm.)	ATJ 9405§	19	A/R					
·236″ (5·994 mm.)	ATJ 9406§	19	A/R					
·240″ (6·096 mm.)	ATJ 9407§	19	A/R					
·244″ (6·198 mm.)	ATJ 9408§	19	A/R					
·248″ (6·299 mm.)	ATJ 9409§	19	A/R					
·252″ (6·401 mm.)	ATJ 9410§	19	A/R					
Pinion—final drive	ATJ 7165§	31	2					WSE use ATJ 9491 with ATJ 9490
	ATJ 7187§	32	2					
	ATJ 9491§	32	2					
Gear—final drive	ATJ 7400§	20	2					WSE use ATJ 9492 with ATJ 9491
Gear—final drive	ATJ 9492§	20	2				4DM–787–22801 on	
Nut—axle shaft	ATJ 7228§	22	2				(plus 13111 to 20000)	
Pin—cotter	CPS 0628	23	2				792–12452 on	
Pinion—final drive	ATJ 7165§	31	2				(plus 5621 to 10000	WSE use
	ATJ 7187§	32	2				3DL–771–9786 on	ATJ 9491 with
	ATJ 9491§	32	2				772–2999 on	ATJ 9492
							342–24000 to 38249	
							(less 38173 to 38192)	
							460–24000 to 38249	
							(less 38173 to 38192)	
Bearing—axle shaft	2K 6008	24	4	★	★			
Seal—oil	ATJ 1024§	25	4	★	★			
Washer (felt)	NT 7183§	26	2	★	★			
Cover—axle end	NT 7182§	27	2					
Bolt—cover to axle casing	HBN 0612	28	6					
Washer—spring—bolt	LWN 306	29	6					
Joint—end cover	NT 8001§	30	2	★	★			
Bearing—pinion	ATJ 1000§	33	2	★	★		4DM–IDE10388 on 787–501 on 792–501 on 3DL–771–501 on 772–501 on	WSE use ATJ 2098
Bearing—pinion	ATJ 2098§	33	2				342–24000 to 38249 (less 38173 to 38192) 460–24000 to 38249 (less 38173 to 38192)	
Washer—plain—bearing	ATJ 7164§	34	2					
Circlip—bearing	NT 4017§	35	2					
Seal—oil	NT 3073§	36	2	★	★			
Seal—oil	ATJ 7651§	36	2					WSE use ATJ 7651
Cover—pinion bearing	NT 7177§	37	2					
Screw—dowel—cover to axle casing	NT 7309§	38	4					
Shim—cover	NT 1331§	39	A/R					
Bolt—axle casing to gearbox	HBN 0712	40	24					
Washer—spring—bolt	LWN 307	41	24					
Bolt—axle casing to gearbox	HBN 0714	42	4					
Washer—spring—bolt	LWN 307	43	4					
Washer—plain—bolt	PWN 107	44	4					

§ Parts peculiar to Tractor only

See title-page for application

†Revised Information. Issue 5

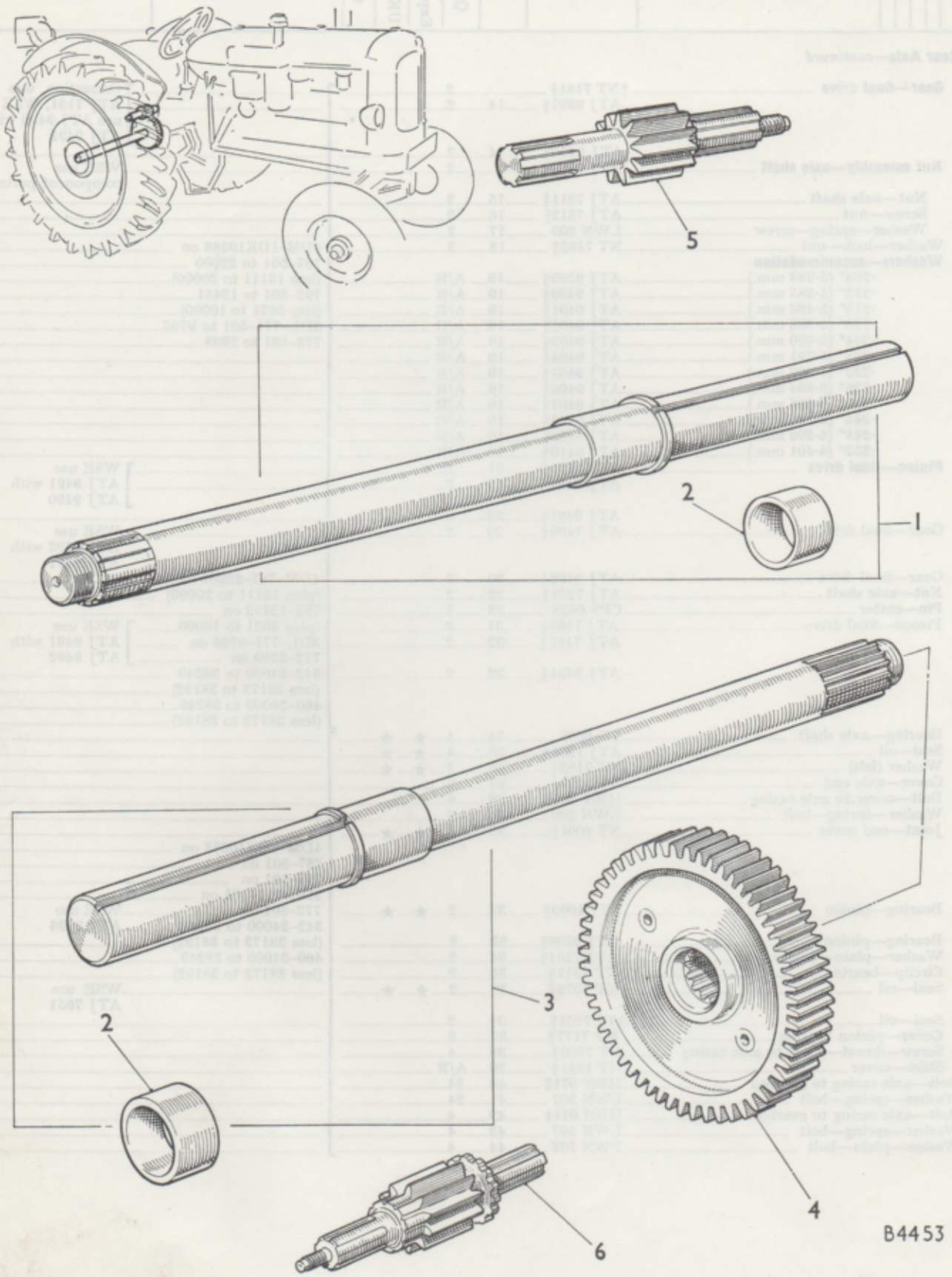
1
2
3
4
5
6
B4453

DESCRIPTION	Part No.	Illus. No.	Quantity	Stock recommds. DIST. Exp.	Stock recommds. DIST. UK	Stock recommds. D	Change Point	REMARKS
Rear Axle—*continued*								
Shaft assembly—axle—extended	NT 8216§	1	2				4DM–IDE10388 on 787–501 to 22800 (less 13111 to 20000) 792–501 to 12451 (less 5621 to 10000)	Optional alternative to NT 7246 WSE use NT 8216
Shaft—axle	NT 8215§		2					
Sleeve	ATJ 7056§	2	2					
Shaft assembly—axle—extended	ATJ 7399§	3	2				4DM–787–22801 on (plus 13111 to 20000) 792–12452 on (plus 5621 to 10000) 460–24000 to 38249 (less 38173 to 38192)	Optional alternative to ATJ 7262 WSE use ATJ 7399
Shaft—axle	ATJ 7398§		2					
Sleeve	ATJ 7056§	2	2					
Gear—final drive	†ATJ 7389§	4	2				4DM–787–22801 on (plus 13111 to 20000) 792–12452 on (plus 5621 to 10000)	WSE use ATJ 7551 with ATJ 9494 Correction; was ATJ 7927
Gear—final drive	†ATJ 7551§	4	2					
Pinion—final drive							3DL–771–9786 on 772–2999 on 342–24000 to 38249 (less 38173 to 38192) 460–24000 to 38249 (less 38173 to 38192)	Low-ratio final drive optional alternative WSE use ATJ 9494 with ATJ 7551
Left hand	†ATJ 7286§	5	1					
Right hand	†ATJ 7287§	6	1					
	ATJ 9494§	6	2					

§ Parts peculiar to Tractor only

See title-page for application

†Revised Information. Issue 4

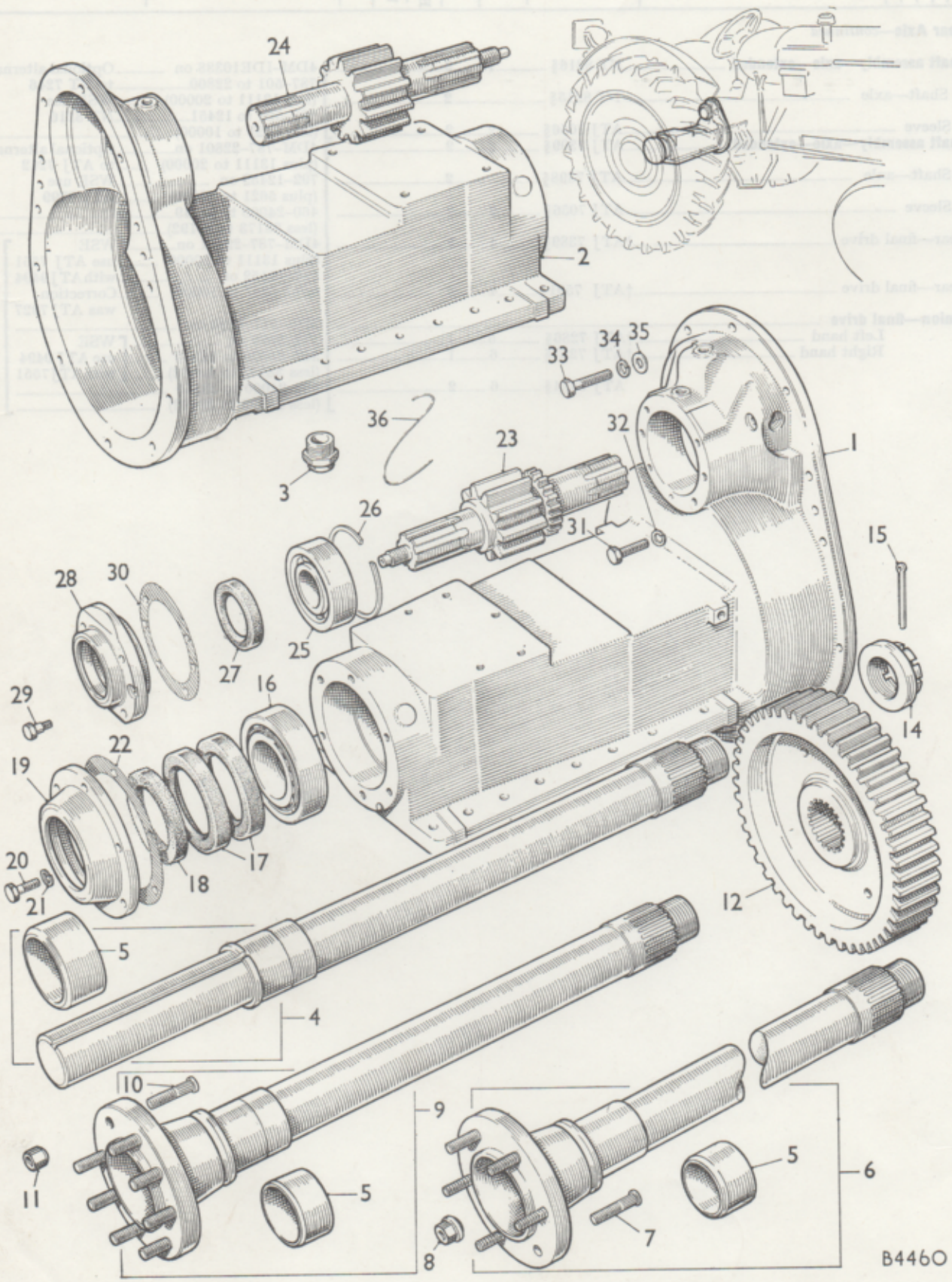
24
2
33
34
35
36
32
23
1
3
26
31
15
28
30
27
25
16
29
22
19
14
20
21
18
17
12
5
4
10
9
11
5
6
5
7
8
B4460

DESCRIPTION	Part No.	Illus. No.	Quantity	Stock recommds. DIST. Exp.	Stock recommds. DIST. UK	Stock recommds. D	Change Point	REMARKS
Rear Axle—*continued*								
Rear axle assembly	NSP		2					
Casing—rear axle—RH	ATJ 7205§	1	1					
Casing—rear axle—LH	NT 7179§	2	1					
Plug—drain	ADP 116	3	2					
Shaft assembly—axle—sliding hub	ATJ 7262§	4	2	★	★			Not available; use ATJ 7686 with 1 off nut ATJ 7673
Sleeve	ATJ 7056§	5	2					
Shaft assembly—axle—flanged hub	ATJ 7227§	6	2	★	★			Not available; use ATJ 7675 with 1 off nut ATJ 7673
Sleeve	ATJ 7056§	5	2					
Stud—wheel	NT 7184§	7	12	★	★			
Nut—wheel stud	NT 7202§	8	12	★	★			
Shaft assembly—axle	ATJ 7260§	9	2	★	★			Not available; use ATJ 7684 with 1 off nut ATJ 7673
Sleeve	ATJ 7056§	5	2					
Stud—wheel	NT 8299§	10	16	★	★			
Nut—wheel stud	NT 8321§	11	16	★	★			
Gear—final drive	ATJ 7400§	12	2					Not available; use ATJ 9492 with ATJ 9493
Gear—final drive	†ATJ 9492§	12	2					
Nut—axle shaft	ATJ 7228§	14	2					
Pin—cotter	CPS 0628	15	2					
Bearing—axle shaft	2K 6008	16	4	★	★			
Seal—oil	ATJ 1024§	17	4	★	★		342–38250 on	
Washer (felt)	NT 7183§	18	2	★	★		(plus 38173 to 38192)	
Cover—axle end	NT 7182§	19	2				460–38250 on	
Bolt	HBN 0612	20	6				(plus 38173 to 38192)	
Washer—spring	LWN 306	21	6					
Joint—end cover	NT 8001§	22	2	★	★			
Pinion—final drive	†ATJ 7438§	23	1					Not available; use ATJ 9493 with ATJ 9492
	†ATJ 7439§	24	1					
	†ATJ 9493	23	2					use ATJ 7438
Bearing—pinion	ATJ 1000§	25	2	★	★			Not available; use ATJ 2098
Bearing—pinion	ATJ 2098§	25	2					
Circlip—bearing	NT 4017§	26	2					
Seal—oil	NT 3073§	27	2	★	★			Not available; use ATJ 7651
Seal—oil	ATJ 7651§	27	2					
Cover—pinion bearing	NT 7177§	28	2					
Screw—dowel—cover to axle casing	NT 7309§	29	4					
Shim—end cover	NT 1331§	30	A/R					
Bolt	HBN 0712	31	24					
Washer—spring	LWN 307	32	24					
Bolt	HBN 0714	33	4					
Washer—spring	LWN 307	34	4					
Washer—plain	PWN 107	35	4					
Wire—locking	ATJ 9392§	36	A/R					Supplied in multiples of 5 yards

§ **Parts peculiar to Tractor only** **See title-page for application** †**Revised Information Issue 4**

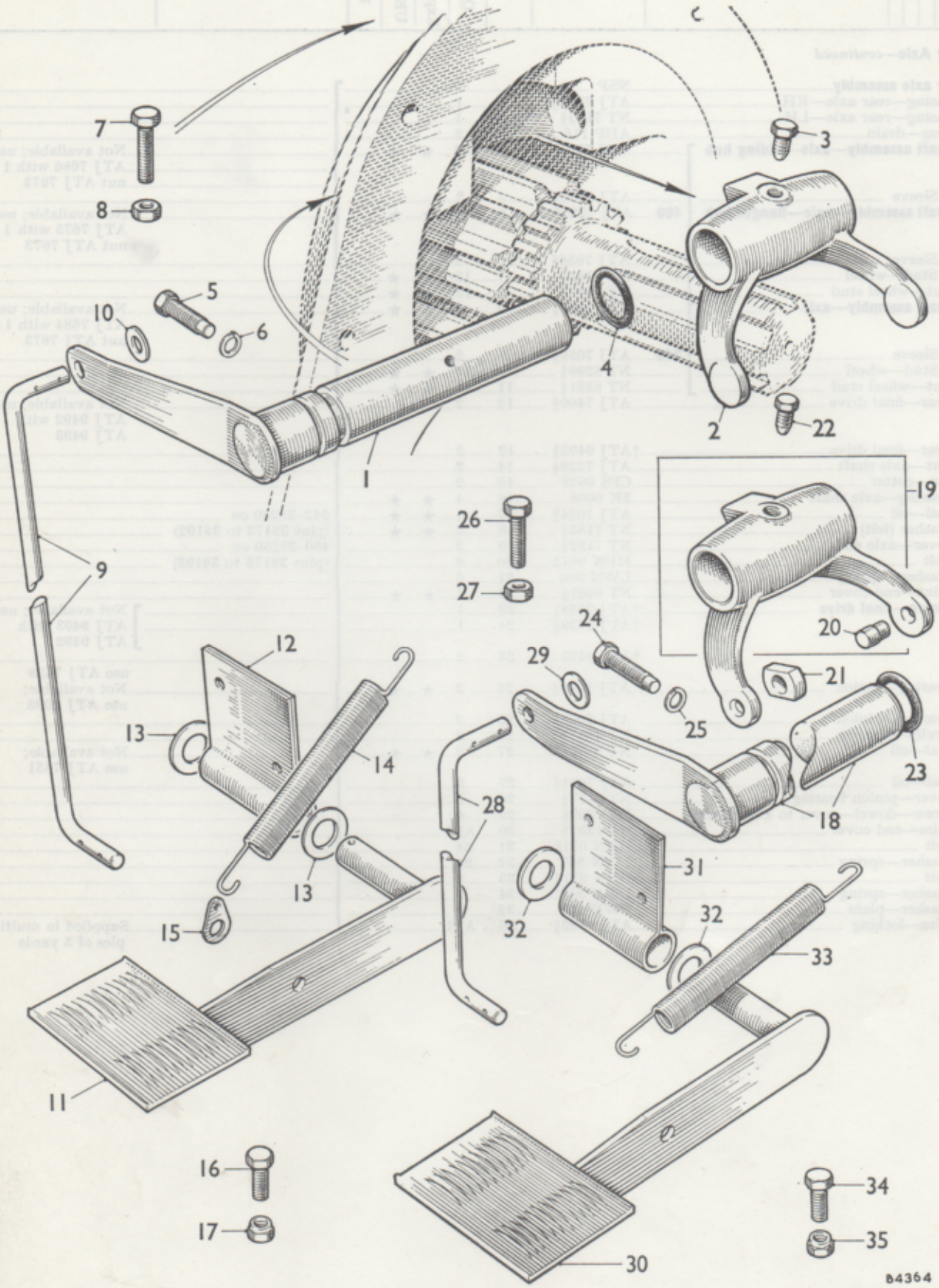
7
8
5
10
6
3
4
2
22
1
19
26
27
9
24
20
12
29
21
25
13
14
23
28
18
31
13
32
32
15
33
11
16
17
34
35
30
84364

DESCRIPTION	Part No.	Illus. No.	Quantity	Stock recommds. DIST. Exp.	Stock recommds. DIST. UK	Stock recommds. D	Change Point	REMARKS
Rear Axle—*continued*								
Sub-assembly—differential lock shaft and lever	ATJ 7370§	1	1					
Fork—operating	ATJ 7380§	2	1					
Screw—locating—operating fork	ATJ 7384§	3	1					
Ring—sealing	TRS 1216	4	1					
Screw—retaining	ATJ 7206§	5	1					
Washer—spring—screw	LWN 206	6	1					
Screw—stop	HNS 0613	7	1					
Nut—screw	FNN 206	8	1				342–38250 to 55560	
Rod—differential lock control	ATJ 8441§	9	1				(plus 38173 to 38192)	
Washer—plain—control rod	PWZ 105	10	4				460–38250 to 55560	
Pedal—operating	ATJ 7367§	11	1				(plus 38173 to 38192)	
Bracket—pivot	ATJ 7368§	12	1					
Washer—plain	PWZ 108	13	2					
Spring—return	ATJ 1006§	14	1	★		★		
Washer—tab—spring	ATJ 7373§	15	1					
Screw—pedal adjusting	HNS 0612	16	1					
Nut—lock—screw	FNZ 106	17	1					
Sub-assembly—differential lock shaft and lever	ATJ 7543§	18	1					
Sub-assembly—operating fork	ATJ 7538§	19	1					
Pin—swivel	ATJ 7540§	20	2					
Pad—swivel	ATJ 7541§	21	2					
Screw—locating—operating fork	ATJ 7384§	22	1					
Ring—sealing	TRS 1216	23	1					
Screw—retaining	ATJ 7206§	24	1					
Washer—spring—screw	LWN 206	25	1					
Screw—stop	HNS 0613	26	1				342–55561 on	
Nut—screw	FNN 206	27	1				460–55561 on	
Rod—differential lock control	ATJ 7544§	28	1					
Washer—plain—control rod	PWZ 105	29	4					
Pedal—operating	ATJ 7367§	30	1					
Bracket—pivot	ATJ 7368§	31	1					
Washer—plain	PWZ 108	32	2					
Spring—return	ATJ 7545§	33	1					
Screw—pedal adjusting	HNS 0612	34	1					
Nut—lock—screw	FNZ 106	35	1					

§ Parts peculiar to Tractor only

See title page for application

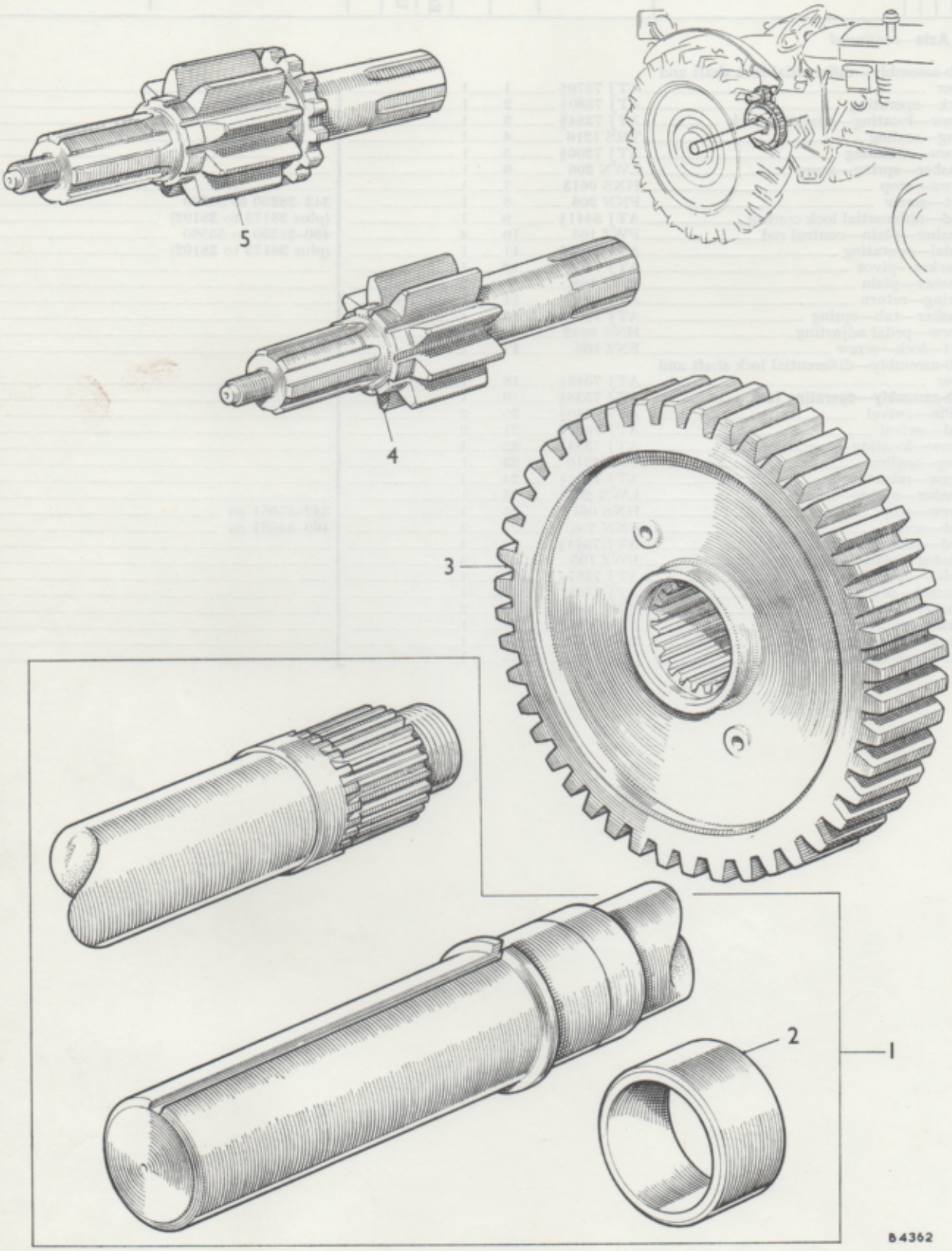

To face page MF 26

DESCRIPTION	Part No.	Illus. No.	Quantity	Stock recommds. DIST. Exp.	Stock recommds. DIST. UK	Stock recommds. D	Change Point	REMARKS
Rear Axle—*continued*								
Shaft assembly—axle—extended	ATJ 7399§	1	2					Optional alternative to ATJ 7262
Shaft—axle	ATJ 7398§		2				WSE use ATJ 7399	
Sleeve	ATJ 7056§	2	2				460–38250 on (plus 38173 to 38192)	
Gear—final drive	†ATJ 7389§	3	2					WSE use ATJ 7551 with ATJ 9495 — Low-ratio final drive optional alternative
Gear—final drive	ATJ 7551§	3	2					
Pinion—final drive								
Left hand	†ATJ 7451§	4	1					WSE use ATJ 9495 with ATJ 7551 — Low-ratio final drive optional alternative
Right hand	†ATJ 7450§	5	1					
	ATJ 9495§	5	2					

§ Parts peculiar to Tractor only

See title-page for application

†Revised Information. Issue 4

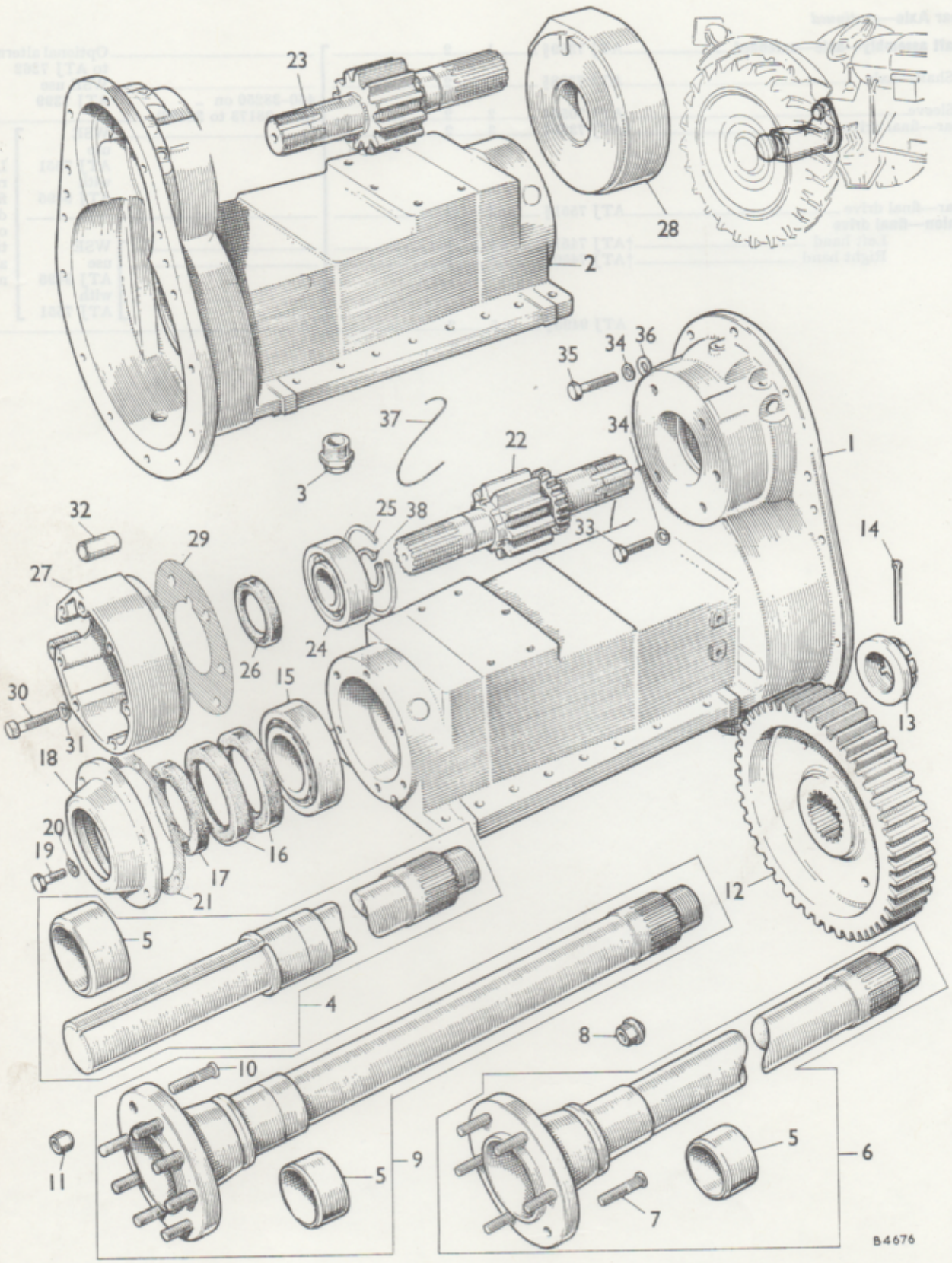
23
28
2
35
34
36
37
34
22
1
3
32
25
38
33
14
29
27
24
26
15
30
13
31
18
20
19
16
17
21
12
5
4
8
10
11
5
9
5
6
7
B4676

DESCRIPTION		Part No.	Illus. No.	Quantity	Change Point	REMARKS
Rear Axle—*continued*						
Rear axle assembly		NSP		2		
Casing—rear axle—RH		ATJ 7549§	1	1	10/42-57420 on	
Casing—rear axle—LH		ATJ 7550§	2	1	10/60-57420 on	
Plug—drain		ADP 116	3	2		
Shaft assembly—axle—sliding hub		†ATJ 7262§	4	2		WSE use ATJ 7686 with 1 off nut ATJ 7673
Sleeve		ATJ 7056§	5	2	57420 to 68244	
Shaft assembly—axle—flanged hub	**10/60**	†ATJ 7227§	6	2	Plus 69533 and 69534	WSE use ATJ 7675 with 1 off nut ATJ 7673
Sleeve		ATJ 7056§	5	2		
Stud—wheel		NT 7184§	7	12		
Nut—wheel stud		NT 7202§	8	12		
Shaft assembly—axle		†ATJ 7260§	9	2		WSE use ATJ 7684 with 1 off nut ATJ 7673
Sleeve	**10/42**	ATJ 7056§	5	2	57420 to 68375	
Stud—wheel		NT 8299§	10	16		
Nut—wheel stud		NT 8321§	11	16		
Shaft assembly—axle—sliding hub		ATJ 7686§	4	2		
Sleeve		ATJ 7056§	5	2		
Shaft assembly—axle—flanged hub		ATJ 7675§	6	2	68245 to 89156 less 69533 and 69534	WSE use ATJ 7786
	10/60					
Sleeve		ATJ 7056§	5	2		
Stud—wheel		NT 7184§	7	12		
Nut—wheel stud		NT 7202§	8	12		
Shaft assembly—axle—flanged hub		ATJ 7786§		2		
Sleeve	**10/60**	ATJ 7784§		2	89156 on	
Stud—wheel		NT 7184§		12		
Nut—wheel stud		NT 7202§		12		
Shaft assembly—axle		†ATJ 7684§	9	2		WSE use ATJ 7790
Sleeve	**10/42**	ATJ 7056§	5	2	68376 to 89756	
Stud—wheel		NT 8299§	10	16		
Nut—wheel stud		NT 8321§	11	16		
Shaft assembly—axle		ATJ 7790§		2		
Sleeve	**10/42**	ATJ 7784§		2	89756 on	
Stud—wheel		NT 8299§		16		
Nut—wheel stud		NT 8321§		16		

§ Parts peculiar to Tractor only

See title-page for application

†Revised Information. Issue 5

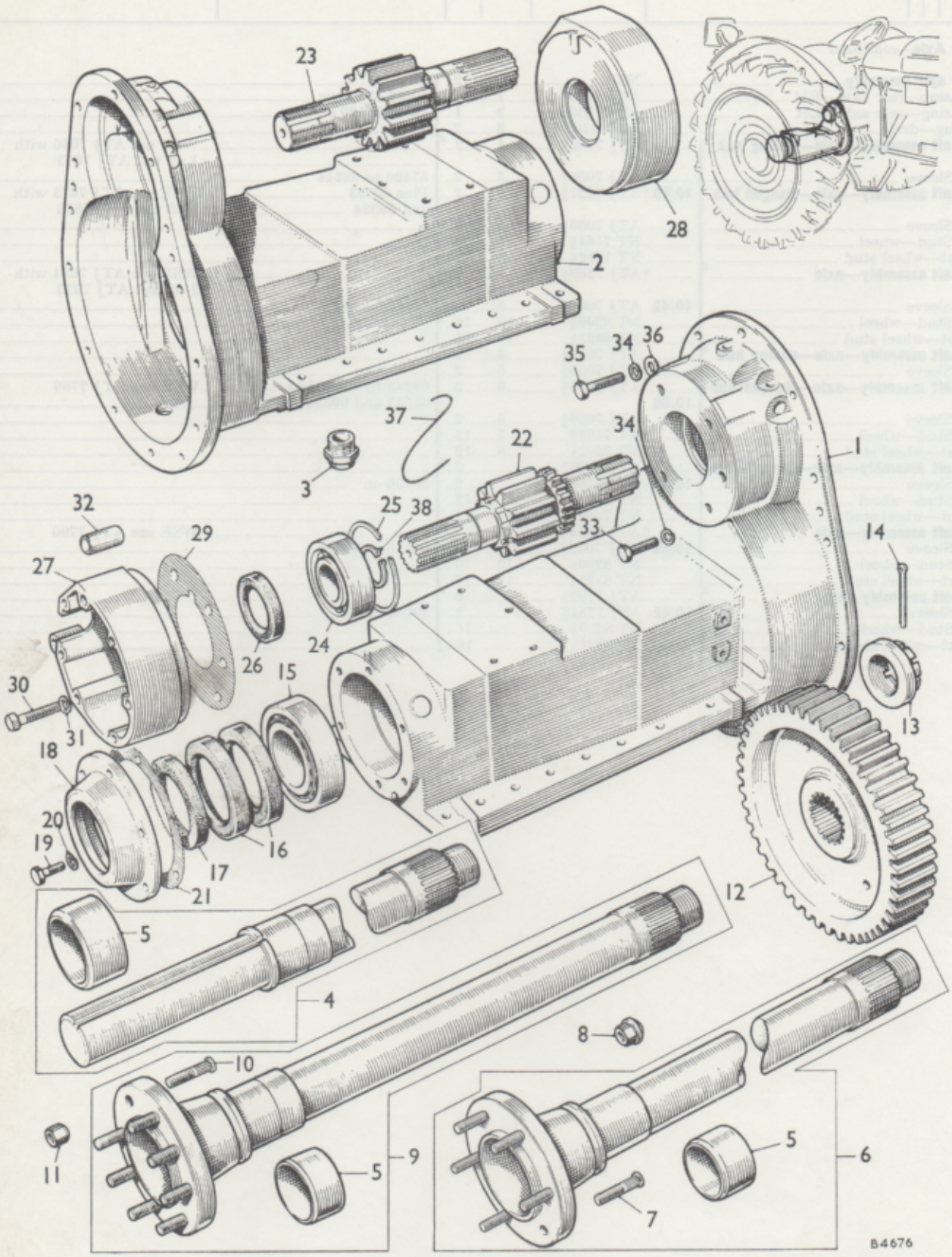
23
28
2
35
34
36
37
34
1
3
22
32
25
38
33
14
29
27
24
26
15
30
31
18
13
20
19
16
17
21
12
5
4
8
10
11
5
9
5
6
7
B4676

DESCRIPTION		Part No.	Illus. No.	Quantity	Change Point	REMARKS
Rear axle—*continued*						
Gear—final drive						
	10/42	ATJ 7551§	12	2	See (1) foot of page	WSE use ATJ 7927 with ATJ 5520 or ATJ 5521
		ATJ 7795§	12	2	See (2) foot of page	
	10/60	ATJ 7795§	12	2	57420 on	
	10/60, 10/42	ATJ 7927§	12	2	See (3) foot of page	
Nut—axle shaft		ATJ 7228§	13	2	10/42-57420 to 68375	
					10/60-57420 to 68244	
					Plus 69533 and 69534	
Nut—axle shaft		ATJ 7673§	13	2	10/42-68376 on	
					10/60-68245 on less 69533 and 69534	
Pin—cotter		CPS 0628	14	2		
Bearing—axle shaft		2K 6008	15	4		
Seal—oil		ATJ 1024§	16	4		
Washer (felt)		NT 7183§	17	2	10/42-57420 on	
Cover—axle end		NT 7182§	18	2	10/60-57420 on	
Bolt		HBN 0612	19	6		
Washer—spring		LWN 306	20	6		
Joint—end cover		NT 8001§	21	2		
Pinion—final drive						
Right hand		ATJ 7639§	22	1	See (1) foot of page	WSE use ATJ 5520 or ATJ 5521 together with ATJ 7927
Left hand	10/42	ATJ 7640§	23	1		
Right hand		ATJ 7804§	22	1	See (2) foot of page	
Left hand		ATJ 7805§	23	1		
Right hand	10/60	ATJ 7804§	22	1	See (2) foot of page	
Left hand		ATJ 7805§	23	1		
Right hand	10/42	ATJ 7926§	22	1	See (3) foot of page	
Left hand	10/60	ATJ 7925§	23	1		
Right hand	10/42	†ATJ 5520§	22	1		
Left hand	10/60	†ATJ 5521§	23	1		
Circlip—pinion		ESC 045	38	2		
Bearing—pinion		ATJ 1000§	24	2		WSE use ATJ 2098
Bearing—pinion		ATJ 2098§	24	2		
Circlip—bearing		NT 4017§	25	2	10/42-57420 on	
Seal—oil		ATJ 7558§	26	2	10/60-57420 on	
Housing—brake—RH		ATJ 7556§	27	1		
Housing—brake—LH		ATJ 7555§	28	1		
Joint—housing		ATJ 7557§	29	2		
Bolt		HBN 0715	30	12		
Washer—spring		LWN 207	31	12		
Dowel—housing to axle casing		AMK 602	32	4		
Bolt		HBN 0712	33	24		
Washer—spring		LWN 207	34	24		
Bolt		HBN 0714	35	4		
Washer—spring		LWN 207	34	4		
Washer—plain		PWN 107	36	4		
Wire—locking		ATJ 9392§	37	A/R		Supplied in multiples of 5 yards

CHANGE POINTS

(1) 57420 to 95798 (less 94354 to 94746, 94750 to 94754, 94757, 94758, 94762, 94776, 94778, 94811, 95288 to 95294, 95296 to 95382, 95387 to 95524, 95526 to 95546, 95548 to 95551, and 95553 to 95794.)

(2) 95799 to 98616 (plus 94354 to 94746, 94750 to 94754, 94757, 94758, 94762, 94776, 94778, 94811, 95288 to 95294, 95296 to 95382, 95387 to 95524, 95526 to 95546, 95548 to 95551, and 95553 to 95794.) (Less 97496, 97544, 97546, 97549, 97554, 97561, 97562, 97572 to 97581, 97584 to 97600, 97841 to 97843, and 97852 to 97856.

(3) 98617 on (plus 97496, 97544, 97546, 97549, 97554, 97561, 97562, 97572 to 97581, 97584 to 97600, 97841 to 97843 and 97852 to 97856.

§ Parts peculiar to Tractor only

See title-page for application

†Revised Information. Issue 4

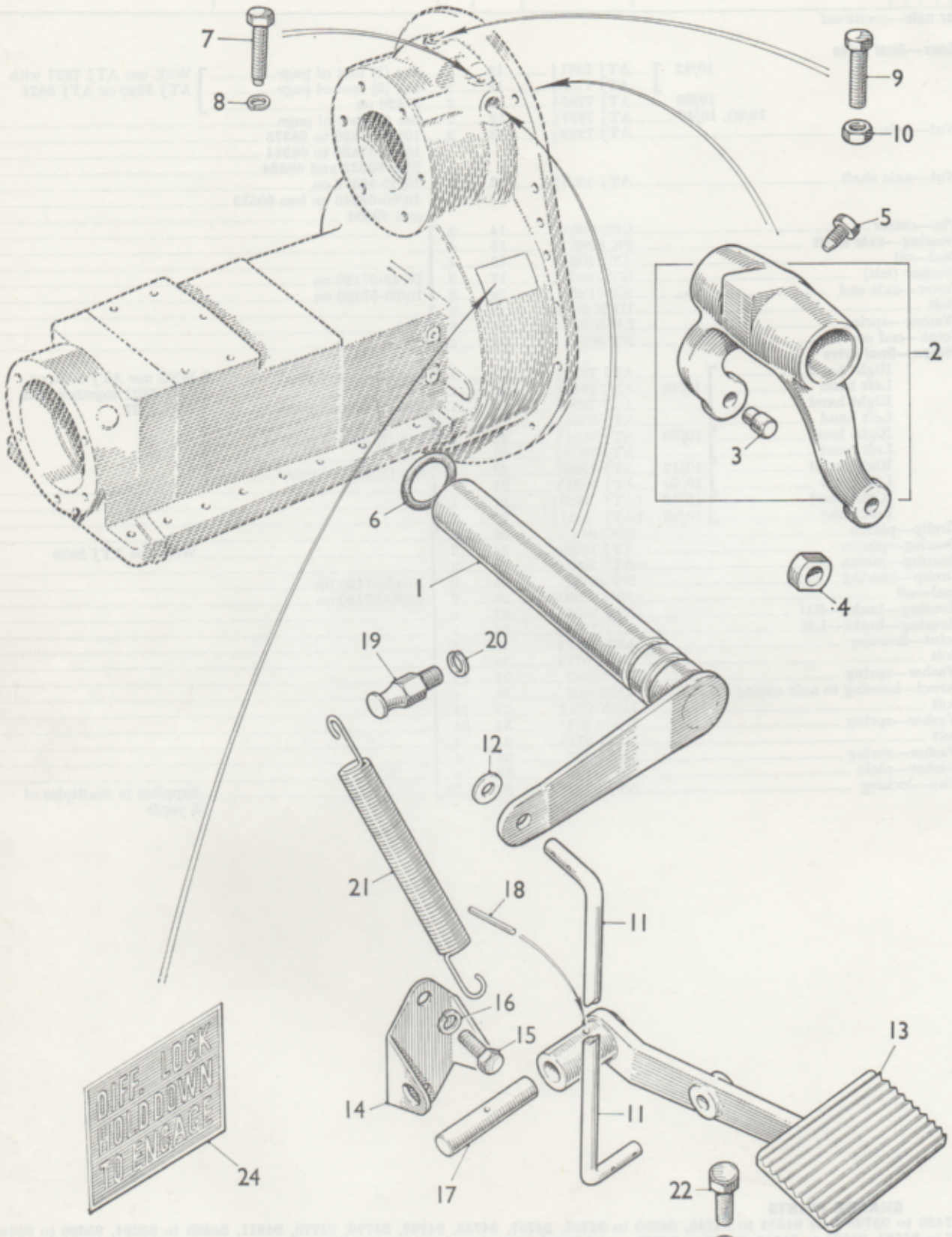
7
8
9
10
5
2
3
6
1
4
19
20
12
21
18
11
16
15
14
13
11
17
22
23
24
DIFF. LOCK
HOLD DOWN
TO ENGAGE
B4678

DESCRIPTION	Part No.	Illus. No.	Quantity	Stock recommds. DIST. Exp.	Stock recommds. DIST. UK	Stock recommds. D	Change Point	REMARKS
Rear Axle—*continued*								
Sub-assembly—differential lock shaft and lever	ATJ 7599§	1	1					
Fork assembly—operating	ATJ 7538§	2	1					
Pin—swivel	ATJ 7540§	3	2					
Pad—swivel	ATJ 7541§	4	2					
Screw—locating—operating fork	ATJ 7384§	5	1					
Ring—sealing	TRS 1216	6	1					
Screw—retaining	ATJ 7206§	7	1					
Washer—spring—screw	LWN 206	8	1					
Screw—stop	HNS 0614	9	1					
Nut—screw	FNN 206	10	1					
Rod—differential lock control	ATJ 7595§	11	1					
Washer—plain—control rod	PWZ 105	12	4				10/42–57420 on	
Pedal—operating	ATJ 7592§	13	1				10/60–57420 on	
Bracket—pedal	ATJ 7593§	14	1					
Screw—bracket	HNS 0505	15	2					
Washer—spring—screw	LWN 205	16	2					
Pin—pivot—operating pedal	ATJ 7594§	17	1					
Pin—grooved	MPS 0406	18	1					
Stud—spring mounting	ATJ 7596§	19	1					
Washer—spring—stud	LWN 205	20	1					
Spring—return	ATJ 7545§	21	1	★	★			
Screw—adjusting	HZS 0609	22	1					
Nut—lock—screw	FNZ 206	23	1					
Transfer—differential lock instruction	ATJ 7650§	24	1					

§ **Parts peculiar to Tractor only**

See title-page for application

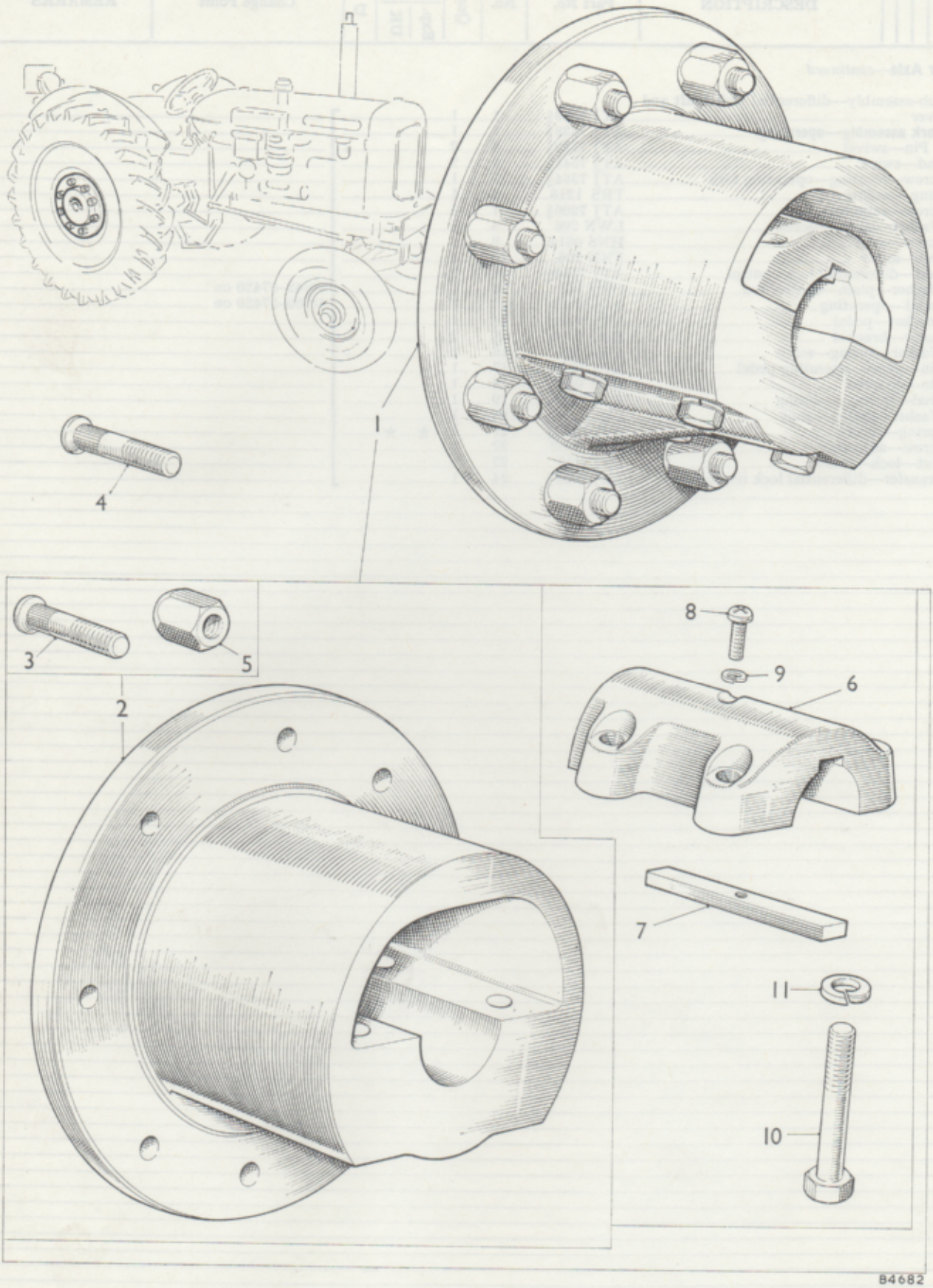

To face page MF 29

DESCRIPTION	Part No.	Illus. No.	Quantity	Stock recommds. DIST. Exp.	Stock recommds. DIST. UK	Stock recommds. D	Change Point	REMARKS
REAR SLIDING HUB								
Rear hub assemblies	NT 5824§		2				4DM-DE1001 to 10387	Not available; use ATJ 8038
	NT 7351§		2				4DM-IDE10388 on	
							787-501 to 4009	
							792-501 to 1600	
	ATJ 8038§	1	2				4DM-787-4010 on	
							792-1601 on	
							460-24000 on	
							10/60-24000 on	
Hub sub-assemblies	NT 7316§		2				4DM-DE1001 to 10387	Not available; use ATJ 9384
	NT 8049§		2				4DM-IDE10388 on	
							787-501 to 4009	
							792-501 to 1600	
	ATJ 9384§	2	2				4DM-787-4010 on	
							792-1601 on	
							460-24000 on	
							10/60-24000 on	
Stud—wheel	NT 5827§	3	16	★	★		4DM-DE1001 to 10387	
Stud—wheel	NT 7354§	4	16	★	★		4DM-IDE10388 on	
							787-501 on	
							792-501 on	
							460-24000 on	
							10/60-24000 on	
Nuts—wheel stud	NT 5828§	5	16	★	★		4DM-DE1001 to 10387	
	NT 7421§		16				4DM-IDE10388 on	Not available; use ATJ 8033
							787-501 to 4009	
							792-501 to 1600	
	ATJ 8033§	5	16	★	★		4DM-787-4010 on	
							792-1601 on	
							460-24000 on	
							10/60-24000 on	
Block—clamping	NT 5826§		2				4DM-DE1001 to 10387	Not available; use NT 7367
Block—clamping	NT 7367§	6	2				4DM-IDE10388 on	
							787-501 on	
							792-501 on	
							460-24000 on	
							10/60-24000 on	
Key—clamping block	NT 5829§	7	2					
Screw—key to block	PMN 0416	8	2					
Washer—spring—screw	LWN 204	9	2					
Bolt—clamping block and hub to axle shaft	HBN 1232	10	8					
Washer—spring—bolt	LWN 212	11	8					

§ Parts peculiar to Tractor only

See title-page for application

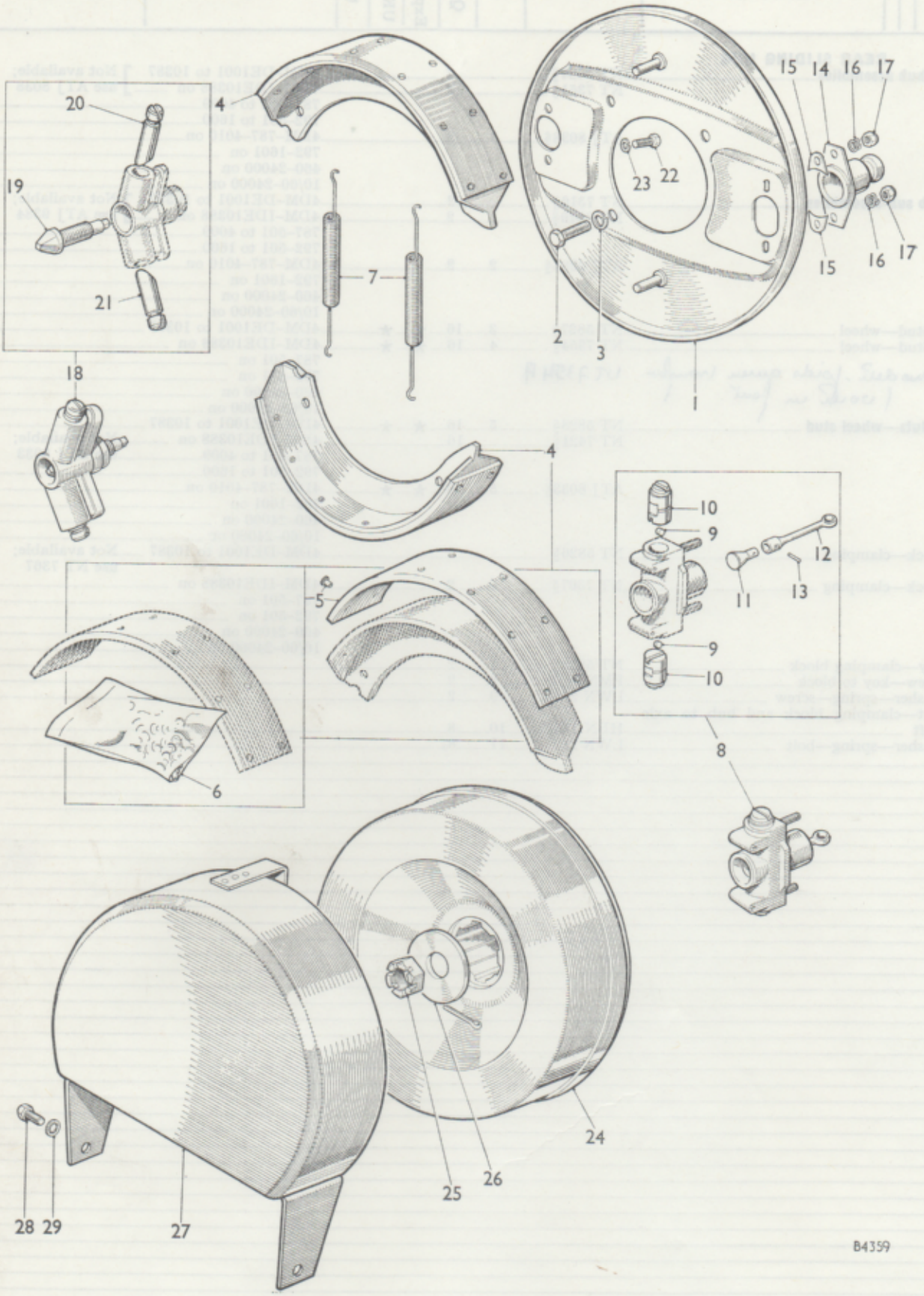

To face page MF 30

DESCRIPTION	Part No.	Illus. No.	Quantity	Stock recommds. DIST. Exp.	Stock recommds. DIST. UK	Stock recommds. D	Change Point	REMARKS
BRAKES								
Brake assembly	NT 1175§		2					WSE use component parts
Plate—brake	NT 1176§	1	2					
Bolt—brake plate to axle case	ATJ 1014§	2	8					
Washer—spring—bolt	LWN 206	3	8					
Shoe assembly—brake	8G 8633§	4	2					
Lining and rivet	8G 8464§	5	1					
Lining	NSP		4					
Rivet	17H 4429	6	40					
Spring—brake shoe pull-off	AAA 6075§		1 set					Part No. change; was 79513 WSE use 4 off 1H 4039 or 1G 4162
	1H 4039	7	4					Alternatives use 1H 4039
	1G 4162	7	4					
Expander unit	AAA 6009§	8	2					Part No. change; was 79106
Roller	AAA 6011§	9	4					Part No. change; was 79108
Tappet	AAA 6010§	10	4					Part No. change; was 79107
Cone	AAA 6012§	11	2					Part No. change; was 79109
Drawlink	AAA 6013§	12	2					Part No. change; was 79110
Pin—cone	AAA 6014§	13	2				4DM-DE1001 to 5936	Part No. change; was 79111
Cover—dust—expander unit	AAA 6015§	14	2					Part No. change; was 79112
Washer—dust cover	PWZ 104	15	4					PartNo. change; was 79114 and AAA 6017
Washer—spring—expander unit	2K 2543	16	4					Part No. change; was 79115
Nut—expander unit stud	†AAA 6016§	17	4					Part No. change; was 7913, WSE use AJD 8134Z
Nut—expander unit stud	†AJD 8134Z	17	4					
Adjuster unit	AAA 6018§	18	2					Part No. change; was 79116
Wedge	†IG4116	19	2					Part No. change; was 79117, and AAA6019
Plunger—RH	AAA 6020§	20	2					Part No. change; was 79118
Plunger—LH	AAA 6021§	21	2					Part No. change; was 79119
Bolt—adjuster unit to brake plate	AJD 6254N§	22	4					PartNo. change; was 79120 and AAA 6022
Washer—spring—bolt	†AAA 6023§	23	4					Part No. change; was 79121, W.S.E. use LWN 205
Washer—spring—bolt	†LWN 205	23	4					
Drum—brake	NT 5305§	24	2					
Nut—drum to pinion shaft	FNN 412	25	2					
Washer—plain—nut	NT 3086§	26	2					WSE use ATJ 9325
Washer—plain—nut	†ATJ 9325§	26	2					
Cover—brake drum	NT 6634§	27	2					
Screw—brake drum cover	HNS 0504	28	8					
Washer—shakeproof—screw	LWN 405	29	6					

§ Parts peculiar to Tractor only

See title-page for application

†Revised Information. Issue 2

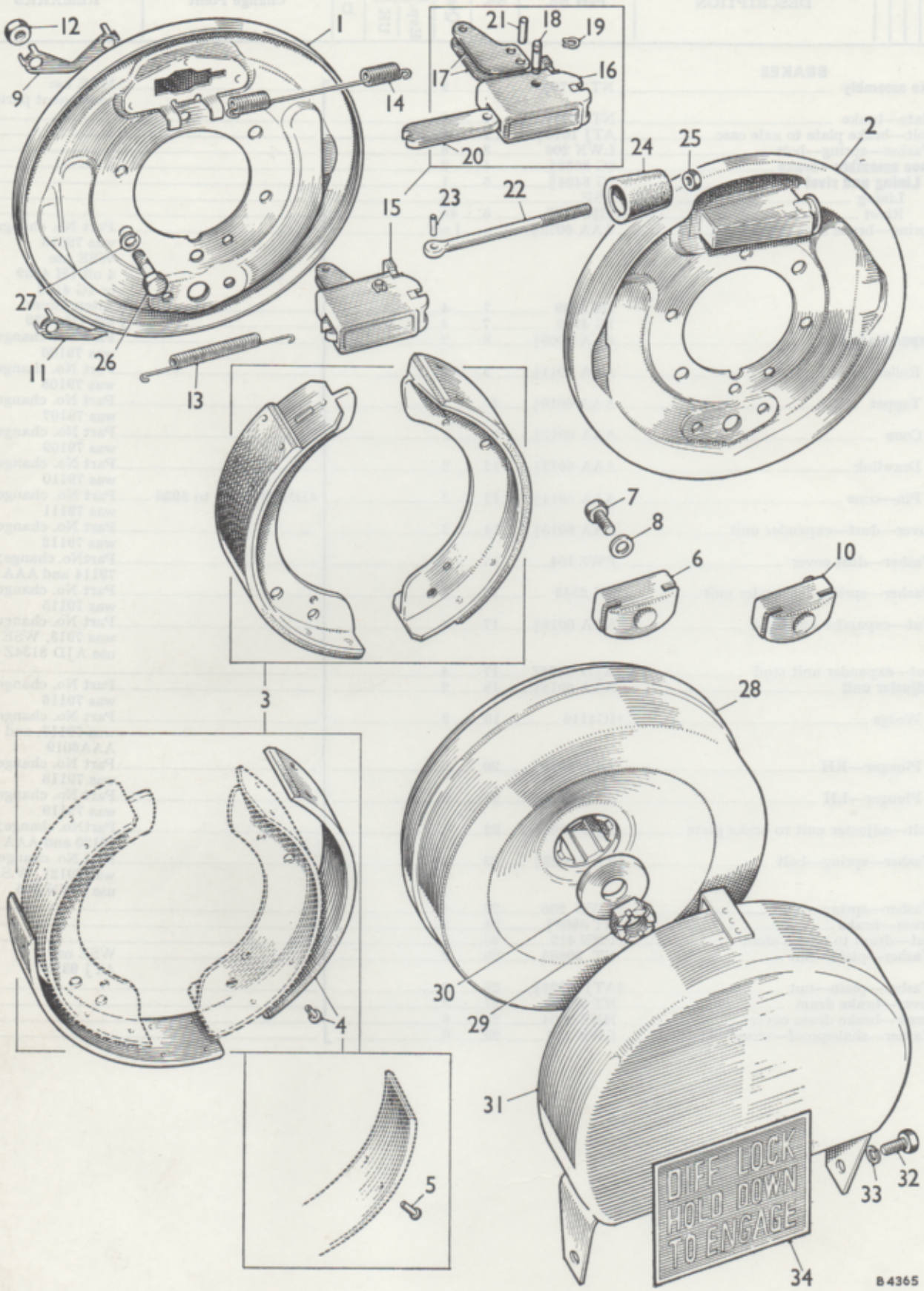
12
1
21
18
19
9
17
16
14
20
24
25
2
15
23
22
27
26
11
13
7
8
6
10
3
28
30
29
4
31
5
DIFF LOCK
HOLD DOWN
TO ENGAGE
33
32
34
B4365

DESCRIPTION	Part No.	Illus. No.	Quantity	Stock recommds. DIST. Exp.	Stock recommds. DIST. UK	Stock recommds. D	Change Point	REMARKS
Brakes—*continued*								
Brake assemblies								
Right-hand	NT 6646§		1				4DM–DE5937 on	
Left-hand	NT 6647§		1				IDE10388 on	
							787–501 to 10432	
							(less 6840 to 10000)	Not available; use component parts
							792–501 to 3052	
							(less 2011 to 2100)	
							3DL–771–501 to 5046	
							772–501 to 1391	
Right-hand	ATJ 7275§		1				4DM–787–10433 on	
Left-hand	ATJ 7276§		1				(plus 6840 to 10000)	
							792–3053 on	
							(plus 2011 to 2100)	
							3DL–771–5047 on	
							772–1392 on	
							460–24000 on	
							342–24000 on	
Plate—brake—RH	17H 7025§	1	1				4DM–DE5937 on	
Plate—brake—LH	17H 7026§	2	1				IDE10388 on	
Shoe assembly—brake	8G 8629§	3	2 sets	★	★		787–501 on	
Lining and rivet	8G 8630§	4	1 set	★			792–501 on	
Lining	NSP		4				3DL–771–501 on	
Rivet	7H 7398	5	48				772–501 on	
							460–24000 on	
							342–24000 on	
Abutment	17H 7030§	6	2				4DM–DE5937 on	Not available; use 17H 7726 with 1 off Nut FNN 107
Bolt—abutment to brake plate	17H 7036§	7	4				IDE10388 on	
Washer—plain—bolt	17H 7022	8	4				787–501 to 10432	
Plate—locking	17H 7023§	9	2				(less 6840 to 10000)	Not available; use 17H 7725
							792–501 to 3052	
							(less 2011 to 2100)	
							3DL–771–501 to 5046	
							772–501 to 1391	
Abutment	17H 7726§	10	2				4DM–787–10433 on	
Plate—locking	17H 7725§	11	2				(plus 6840 to 10000)	Part No. change;
Nut—abutment stud	FNN 107	12	4				792–3053 on	was 17H 7728
							(plus 2011 to 2100)	
							3DL–771–5047 on	
							772–1392 on	
							460–24000 on	
							342–24000 on	
Spring—tension	17H 7034§	13	2	★	★		4DM–DE5937 on	
Spring—pull-off	17H 7035§	14	2	★	★		IDE10388 on	
							787–501 on	
							792–501 on	
							3DL–771–501 on	
							772–501 on	
							460–24000 on	
							342–24000 on	

§ **Parts peculiar to Tractor only**

See title-page for application

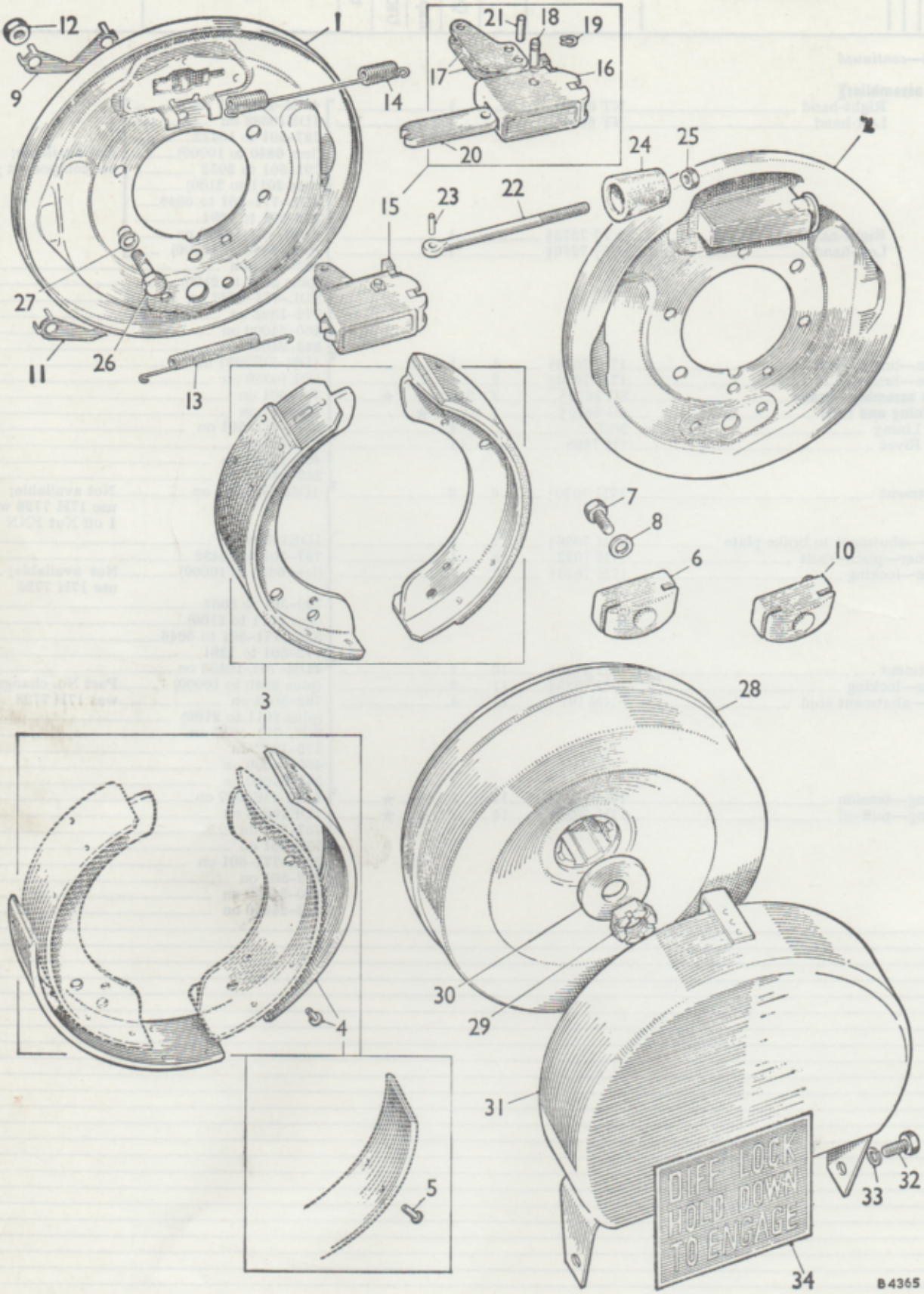

To face page MF 32

DESCRIPTION	Part No.	Illus. No.	Quantity	Stock recommds. DIST. Exp.	Stock recommds. DIST. UK	Stock recommds. D	Change Point	REMARKS
Brakes—*continued*								
Expander unit	ATJ 9307§	15	2	★	★		4DM–787–10433 on (plus 6840 to 10000) 792–3053 on (plus 2011 to 2100) 3DL–771–5047 on 772–1391 on 460–24000 on 342–24000 on	
Body—expander	17H 7024§	16	2					
Lever—outer	17H 7037§	17	2				4DM–DE5937 on IDE10388 on 787–501 to 10432 (less 6840 to 10000) 792–501 to 3052 (less 2011 to 2100) 3DL–771–501 to 5046 772–501 to 1391	
Lever—outer	17H 7727§	17	2				4DM–787–10433 on (plus 6840 to 10000) 792–2053 on (plus 2011 to 2100) 3DL–771–5047 on 772–1391 on 460–24000 on 342–24000 on	
Pin—lever pivot	17H 7027§	18	2					
Circlip—pin	27H 7475§	19	4					
Lever—inner	17H 7038§	20	2					
Pin—inner to outer lever	17H 7039§	21	2					
Rod—operating	17H 7031§	22	2				4DM–DE5937 on	
Pin—rod to outer lever	17H 7032§	23	2				IDE10388 on	
Boot (rubber)	17H 7028§	24	2	★	★		787–501 on	
Nut—operating rod to adjuster	FNN 106	25	2				792–501 on	
Bolt—brake plate to axle casing	ATJ 1014§	26	8				3DL–771–501 on	
Washer—spring—bolt	LWN 206	27	8				772–501 on	
Drum—brake	NT 6625§	28	2				460–24000 on	
Nut—slotted—drum to pinion shaft	FNN 412	29	2				342–24000 on	
Washer—plain—nut	NT 3086§	30	2					
Cover—brake drum	NT 6634§	31	2					
Screw—cover	HNS 0504	32	6					
Washer—spring—screw	LWN 205	33	6					
Transfer—differential lock instruction	ATJ 7650§	34	1					

§ Parts peculiar to Tractor only

See title-page for application

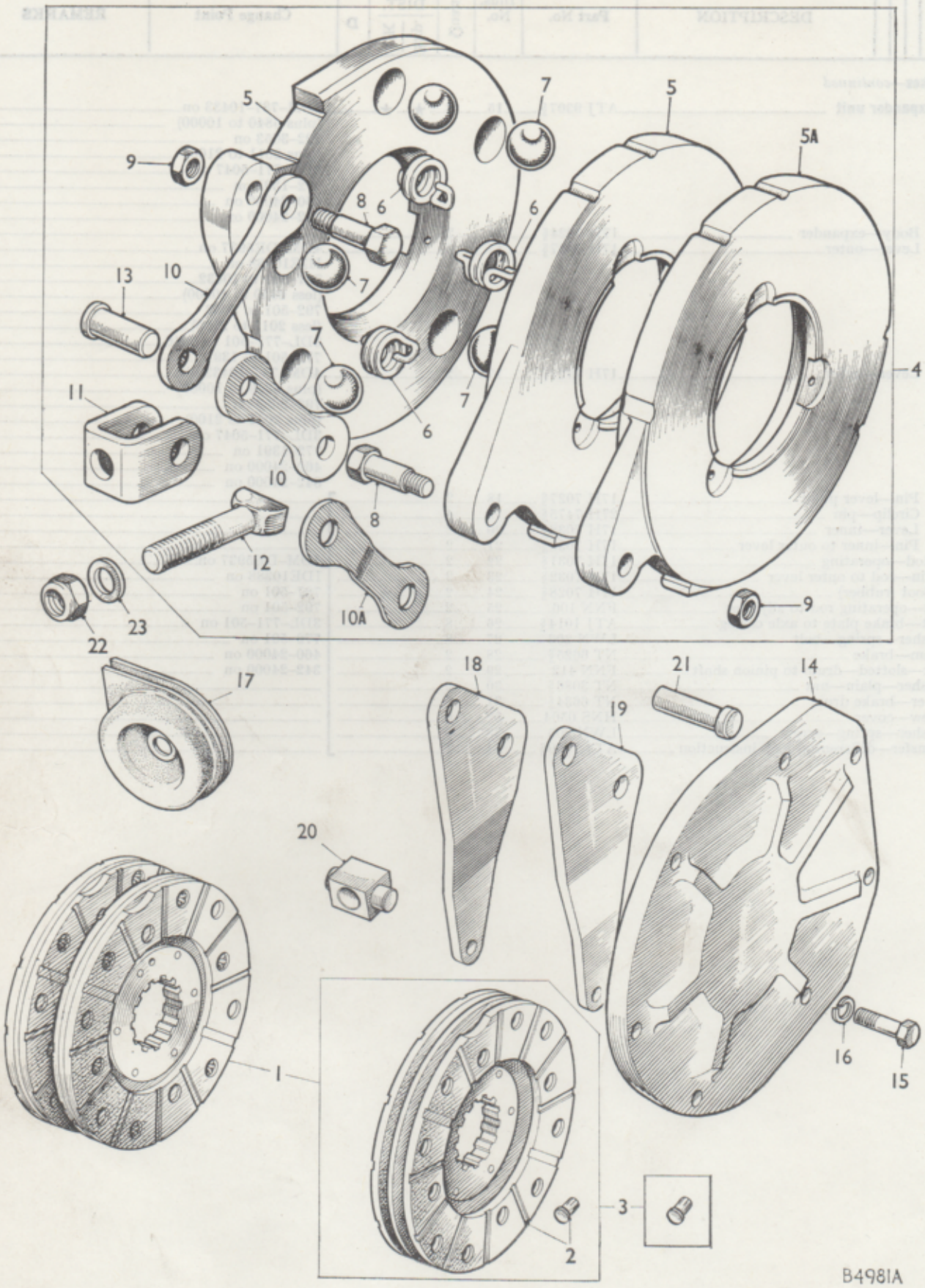
5
7
5
5A
9
8
6
6
13
10
7
7
4
11
7
6
10
8
12
10A
9
23
22
17
18
21
14
19
20
1
16
15
3
2
B4981A

DESCRIPTION	Part No.	Illus. No.	Quantity	Stock recommds. DIST. Exp.	Stock recommds. DIST. UK	Stock recommds. D	Change Point	REMARKS
Brakes—*continued*								
Brake assembly—disc—RH	NSP		1					
Brake assembly—disc—LH	NSP		1					
Friction disc assembly—lined	†8G 8956§	1	2 sets				10/42 –57420 to 92868	WSE use 18G 8238
Lining and rivet	†8G 8957§	2	1 set				10/60–57420 to 92868	WSE use 18G 8239
Friction disc assembly—lined	18G 8238§	1	2 sets				10/42–92869 on	
Lining and rivet	18G 8239§	2	1 set				10/60–92869 on	
Rivet	27H 3505§	3	48				10/42–57420 on	
							10/60–57420 on	
Unit assembly—actuating	†27H 3508§	4	2				10/42–57420 to 92868	
Disc—actuating	†27H 3504§	5	4				10/60–57420 to 92868	
Unit assembly—actuating	†37H 1567§	4	2				10/42–92869 on	
Disc—actuating	†37H 1568§	5A	4				10/60–92869 on	
Spring	27H 3503§	6	6				10/42–57420 on	
Ball	BLS 128§	7	10				10/60–57420 on	Part No. change was 27H 3502
Pin—pivot	†27H 3501§	8	4				10/42–57420 to 92868	
							10/60–57420 to 92868	
Pin—pivot	†37H 1569§	8	4				10/42–92869 on	
							10/60–92869 on	
Nut	FNZ 205	9	4				10/42–57420 on	
							10/60–57420 on	
Link	†27H 3500§	10	4				10/42–57420 to 92868	WSE use 27H 7743
	†27H 7743§	10	4				10/60–57420 to 92868	
plain	†37H 1570§	10	2				10/42–92868 on	
cranked	†37H 1571§	10A	4				10/60–92869 on	
Yoke	27H 3499§	11	2					
Rod—operating	27H 3498§	12	2					
Pin—jaw	27H 3497§	13	2					
Plate—cover	ATJ 7561§	14	2					
Bolt—cover plate	HBN 0610	15	14					
Washer—spring—bolt	LWN 206	16	14				10/42–57420 on	
Boot (rubber)	ATJ 7660§	17	2				10/60–57420 on	
Lever—operating—RH	ATJ 7571§	18	2					
Lever—operating—LH	ATJ 7572§	19	2					
Trunnion	ATJ 7573§	20	2					
Pin—pivot	CLZ 0833	21	2					
Nut—adjusting	LNZ 208	22	2					
Washer—plain—nut	PWZ 108	23	2					

§ Parts peculiar to Tractor only

See title-page for application

†Revised Information. Issue 3

STEERING DETAILS

	Page	Plate
†STEERING-COLUMN (1st TYPE)	MG 1·1	G 1·1
STEERING-COLUMN (2nd TYPE)	MG 2	G 2
†STEERING-COLUMN SHAFT (1st TYPE) ...	MG 1·1	G 1·1
STEERING-COLUMN SHAFT (2nd TYPE) ...	MG 2	G 2
†STEERING DROP-ARM (1st TYPE)	MG 1·1	G 1·1
STEERING DROP-ARM (2nd TYPE)... ...	MG 4	G 4
†STEERING-WHEEL (1st TYPE)	MG 1·1	G 1·1
STEERING-WHEEL (2nd TYPE)	MG 4	G 2

MG

†Revised Information. Issue 2

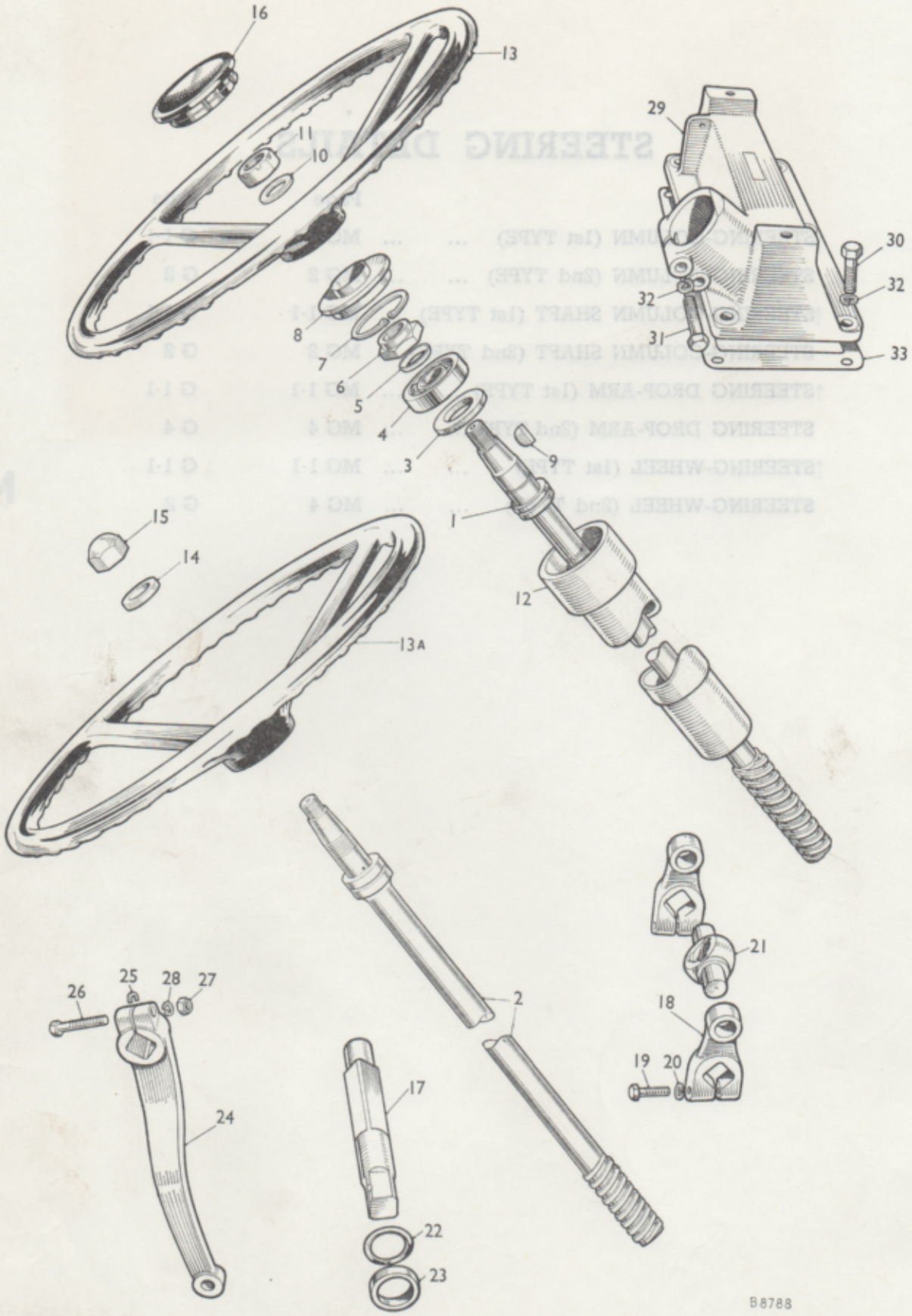
16
13
11
10
29
30
32
32
31
33
8
7
6
5
4
3
9
1
15
14
12
13A
21
2
18
19
20
26
25
28
27
24
17
22
23
B8788

DESCRIPTION	Part No.	Illus. No.	Quantity	Stock recommds. DIST. Exp.	Stock recommds. DIST. UK	Stock recommds. D	Change Point	REMARKS
STEERING DETAILS								
Column assembly—steering	NT 5629§		1				DE1001 to 5127	Not available; use component parts
Column assembly—steering	NT 6543§		1				DE5128 to 10387	
Shaft—steering column	NT 5627§	1	1				DE1001 to 5127	
Shaft—steering column	NT 6540§	2	1				DE5128 to 10387	
Seal—shaft (rubber)	NT 1241§	3	1	★	★			
Bearing—steering column	ATJ 4015§		1					Not available; use ATJ 4186
Bearing—steering column	ATJ 4186§	4	1	★	★			
Washer—belleville—bearing	NT 3067§	5	1					
Nut—steering column shaft	NT 5623§	6	1					
Circlips								
·079″ (2·008 mm.)	ATJ 4192§	7	A/R					One used of selected size
·082″ (2·084 mm.)	ATJ 4193§	7	A/R					
·085″ (2·160 mm.)	ATJ 4194§	7	A/R					
·088″ (2·236 mm.)	ATJ 4195§	7	A/R					
Cover—steering column	NT 5015§	8	1					
Key—steering wheel	WKN 606	9	1					Part No. change; was NT 3043
Washer—steering wheel	PWN 110	10	1					
Nut—steering wheel	FNN 310	11	1				DE1001 to 10387	
Column—steering	NT 5628§	12	1					
Wheel—steering	†NT 2312§	13	1					Not available; use ATJ 4121 with 1 off ATJ 9383 and 1 off †ATJ 4123
Wheel—steering	**4DM** †ATJ 4121§	13A	1	★	★			
Washer—packing—steering wheel	ATJ 9383§	14	1					For use with ATJ 4121
Nut—dome	ATJ 4123§	15	1					
Cap—steering wheel	AAA 1272	16	1					Part No. change; was 118223
Cross-shaft—steering	NT 8315§	17	1					
Lever—trunnion	NT 5624§	18	2					
Bolt—lever clamping	HBN 0718	19	2					
Washer—spring—bolt	LWN 207	20	2					
Nut—trunnion—LHT	NT 1897§	21	1				DE1001 to 5127	
Nut—trunnion—RHT	NT 6541§	21	1				DE5128 to 10387	
Seal—oil—cross-shaft	NT 1206§	22	1	★	★		DE1001 to 10387	
Piece—distance	NT 1205§	23	1					
Drop arm—steering	NT 1907§	24	1				DE1001 to 5127	
Drop arm—steering	NT 7068§	24	1				DE5128 to 10387	
Washer—'D' type—drop arm	NT 5126§	25	1					
Bolt—drop arm clamping	NT 6029§	26	1					
Nut—bolt	FNN 107	27	1					
Washer—spring—nut	LWN 207	28	1					
Cover—steering box	NT 5626§	29	1				DE1001 to 10387	
Screw—cover to housing	HNS 0710	30	6					
Bolt—cover to column	HBN 0722	31	2					
Washer—spring	LWN 207	32	8					
Joint—steering box cover	NT 1234§	33	1	★	★			

§Parts peculiar to Tractor only

See title-page for application

†Revised Information

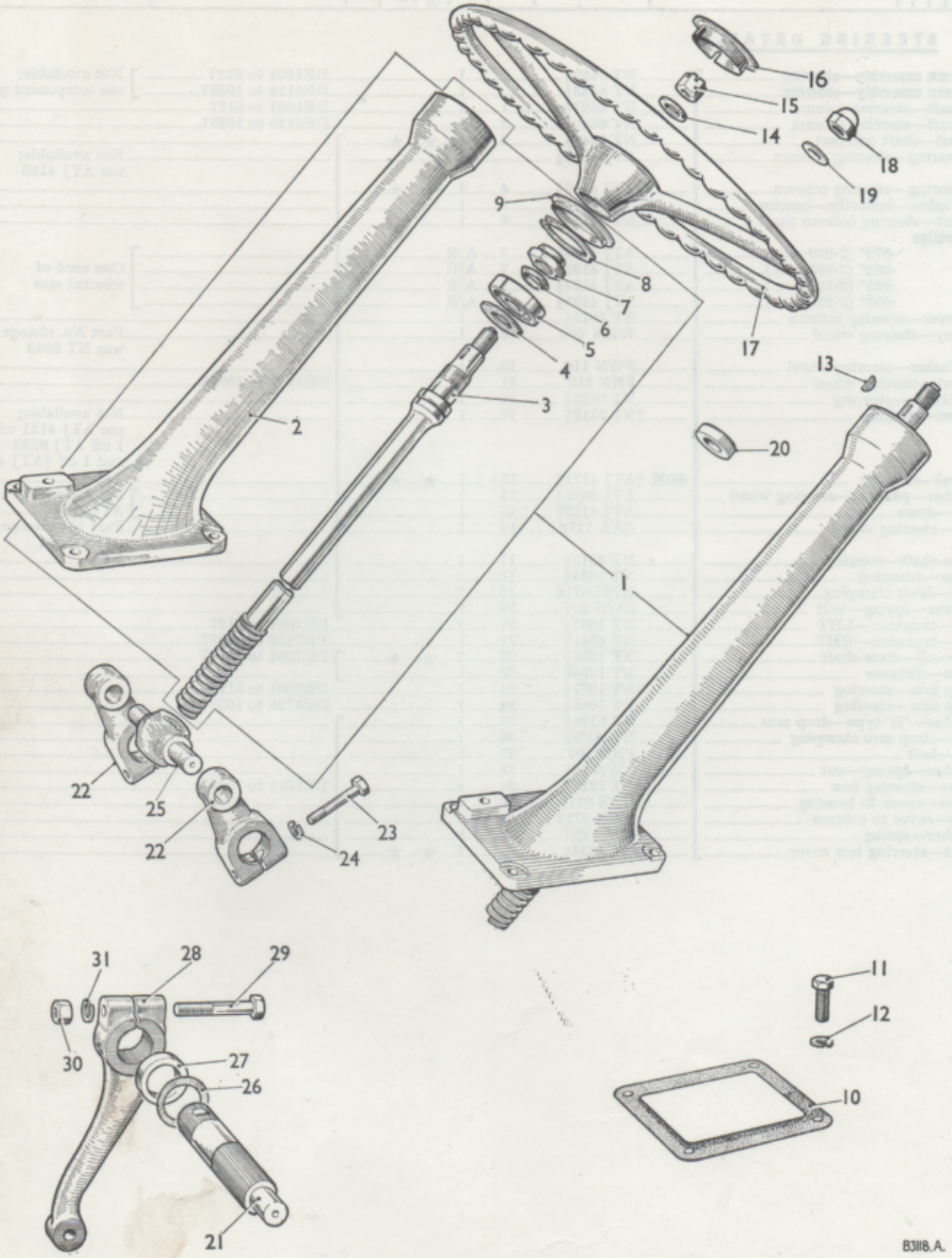
16
15
14
18
19
9
8
7
6
5
4
17
13
3
2
20
1
22
25
22
23
24
31
28
29
30
27
26
21
11
12
10
B3118.A.

DESCRIPTION	Part No.	Illus. No.	Quantity	Stock recommds. DIST. Exp. / UK	Stock recommds. DIST. D	Change Point	REMARKS
Steering Details—*continued*							
Column assembly—steering	NT 6759§		1			4DM–IDE10388 on 787–501 to 10170 (less 6289 to 10000) 792–501 to 2835 (less 1842 to 2100) 3DL–771–501 to 4511 772–501 to 1208	Not available; use ATJ 4179
	ATJ 4014§		1			4DM–787–10171 to 21888 (plus 6289 to 10000, less 12682 to 20000) 792–2836 to 12443 (plus 1842 to 2100, less 5098 to 10000) 3DL–771–4512 to 9093 772–1209 to 2815	Not available; use ATJ 4179
	ATJ 4126§		1			4DM–787–21889 on (plus 12682 to 20000) 792–12444 on (plus 5098 to 10000) 3DL–771–9094 on 772–2816 on 342–24000 to 30575 460–24000 to 30575	Not available; use ATJ 4179
	ATJ 4166§		1			342–30576 to 38249 (less 38173 to 38192) 460–30576 to 38249 (less 38173 to 38192)	Not available; use ATJ 4179
	ATJ 4179§	1	1			342–38250 on (plus 38173 to 38192) 460–38250 on (plus 38173 to 38192) †10/42–57420 on (plus 38173 to 38192) †10/60–57420 on	
Column—steering	NT 6760§	2	1				
Shaft—steering column	†NT 7371§	3	1			4DM–IDE10388 on 787–501 to 21888 (less 12682 to 20000) 792–501 to 12443 (less 5098 to 10000) 3DL–771–501 to 9093 772–501 to 2815	Not available; use ATJ 4122 with 1 off nut ATJ 4123
Shaft—steering column	ATJ 4122§	3	1			4DM–787–21889 on (plus 12682 to 20000) 792–12444 on (plus 5098 to 10000) 3DL–771–9094 on 772–2816 on 342–24000 on 460–24000 on †10/42–57420 on †10/60–57420 on	

§ Parts peculiar to Tractor only

See title-page for application

†Revised Information—Issue 2

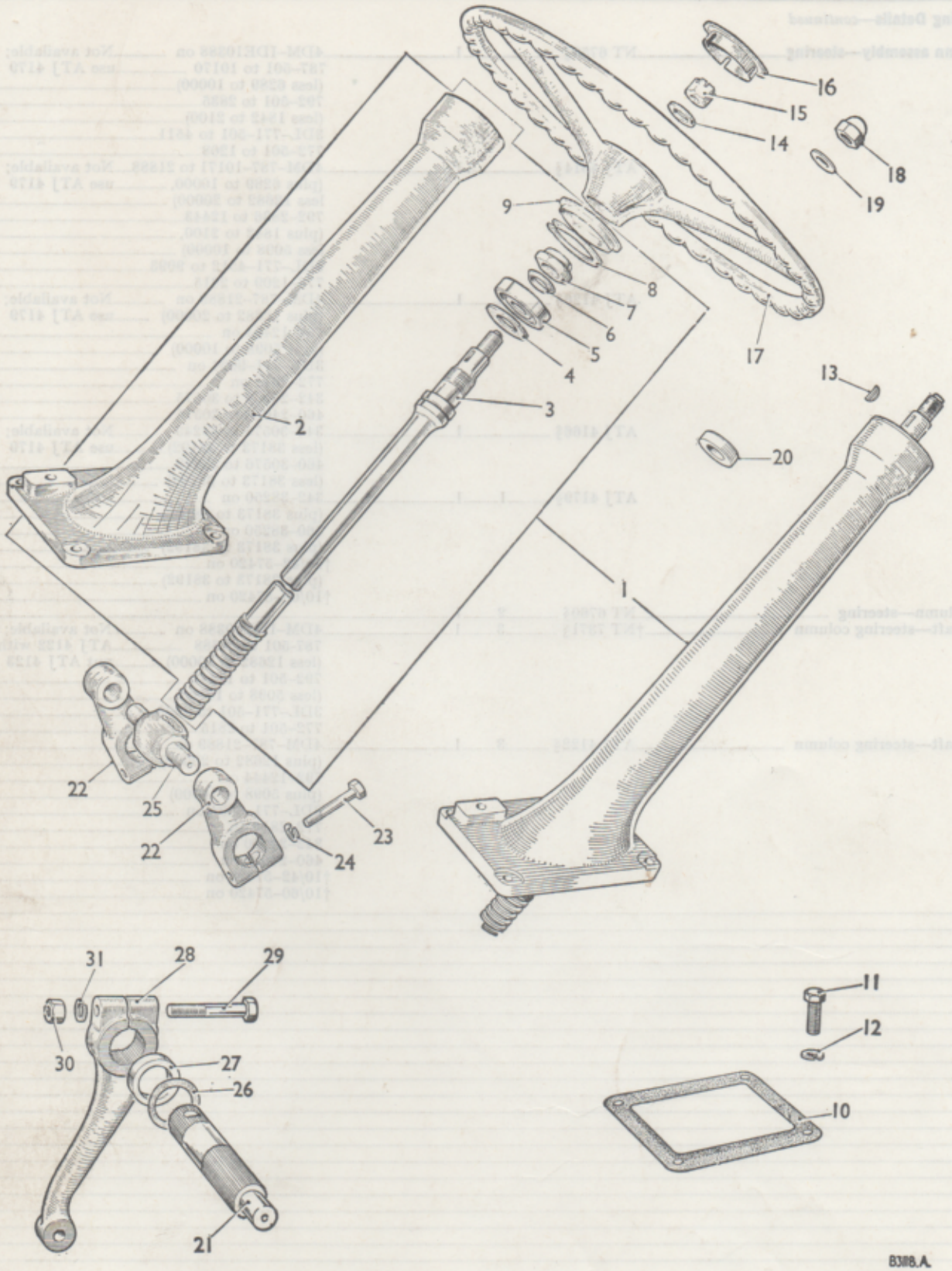
16
15
14
18
19
9
8
7
6
5
4
17
13
3
2
20
1
22
25
22
24
23
31
28
29
30
27
26
21
11
12
10
B308.A

DESCRIPTION	Part No.	Illus. No.	Quantity	Stock recommds. DIST. Exp. / UK	Stock recommds. D	Change Point	REMARKS
Steering Details—*continued*							
Seal—shaft (rubber)	NT 1241§	4	1				
Bearing—steering column	ATJ 9334§		1			4DM–1DE10388 on	WSE use
						787–501 to 10170 (less 6289 to 10000)	†ATJ 1088
						792–501 to 2835 (less 1842 to 2100)	
						3DL–771–501 to 4511	
						772–501 to 1208	
	ATJ 4015§		1			4DM–787–10171 to 21888 (plus 6289 to 10000, less 12682 to 20000)	WSE use †ATJ 1088
						792–2836 to 12443 (plus 1842 to 2100, less 5098 to 10000)	
						3DL–771–4512 to 9093	
						772–1209 to 2815	
	ATJ 4120§		1			4DM–787–21889 on (plus 12682 to 20000)	WSE use †ATJ 1088
						792–12444 on (plus 5098 to 10000)	
						3DL–771–9094 on	
						772–2816 on	
						342–24000 to 30575	
						460–24000 to 30575	
	ATJ 4165§		1			342–30576 to 38249 (less 38173 to 38192)	WSE use †ATJ 1088
						460–30576 to 38249 (less 38173 to 38192)	
	†ATJ 4186§	5	1			342–38250 on (plus 38173 to 38192)	WSE use †ATJ 1088
						460–38250 on (plus 38173 to 38192)	
						†10/42–57420 to 92174	
						†10/60–57420 to 92174	
	†ATJ 1088§	5	1	6305'		10/42–92175 on	
						10/60–92175 on	
Washer—belleville—bearing	NT 3067§	6	1				
Nut—steering column shaft	NT 5623§	7	1				
Circlip—bearing	ISC 362		1				†For this application; use 1 off ATJ 4192, ATJ 4193, ATJ 4194 or ATJ 4195 as required
Circlip—bearing							
·079″ (2·008 mm.)	ATJ 4192§	8	A/R				One used of selected size
·082″ (2·084 mm.)	ATJ 4193§	8	A/R				
·085″ (2·160 mm.)	ATJ 4194§	8	A/R				
·088″ (2·236 mm.)	ATJ 4195§	8	A/R				
Cover—steering column	NT 5015§	9	1				

§ Parts peculiar to Tractor only

See title-page for application

†Revised Information. Issue 2

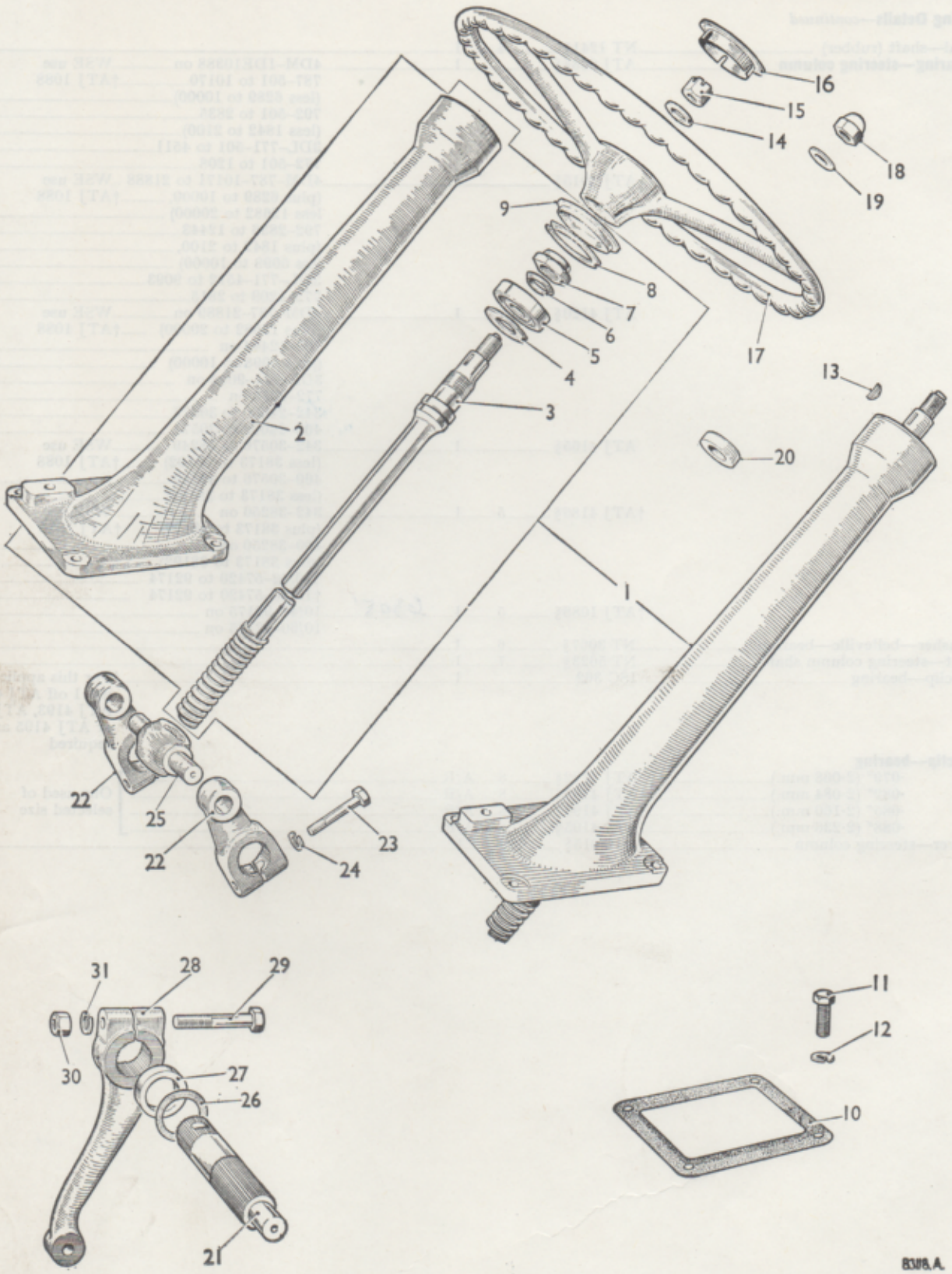
16
15
14
18
19
9
8
7
6
5
4
17
13
3
2
20
1
22
25
22
24
23
31
28
29
30
27
26
21
11
12
10
83/8.A.

DESCRIPTION	Part No.	Illus. No.	Quantity	Stock recommds. DIST. Exp.	Stock recommds. DIST. UK	Stock recommds. D	Change Point	REMARKS
Steering Details—*continued*								
Joint—steering column	NT 6749§	10	1	★	★			—
Screw—column to housing	HNS 0710	11	4					
Washer—spring—screw	LWN 207	12	4					
Key—steering wheel	WKN 606	13	1					
Wheel—steering	NT 2312§		1				4DM–IDE10388 on	Not available; use
							787–501 to 21888 (less 12682 to 20000)	ATJ 4121 with 1 off ATJ 9383 and
							792–501 to 12443 (less 5098 to 10000)	ATJ 4123
Washer—plain—wheel	PWN 110	14	1				3DL–771–501 to 9093	
Nut—slotted—wheel	FNN 310	15	1				772–510 to 2815	Part No. change; was 118223
Cap—steering wheel	AAA 1272	16	1					
Wheel—steering	ATJ 4121§	17	1	★	★		4DM–787–21889 on (plus 12682 to 20000)	—
Nut—domed—steering wheel	ATJ 4123§	18	1				792–12444 on (plus 5098 to 10000)	
Washer—plain—nut	PWZ 110	19	1				3DL–771–9094 on	
							772–2816 on	
							342–24000 on	
							460–24000 on	
							10/42–24000 on	
							10/60–24000 on	—
Washer—packing—steering wheel	ATJ 9383§	20	1					For use with ATJ 4123 when replacing NT 2312 with ATJ 4121
Cross-shaft—steering	NT 8003§	21	1					
Lever—trunnion	NT 8002§	22	2					
Screw—lever clamping	HNS 0718	23	2					
Washer—spring—screw	LWN 207	24	2					
Nut—trunnion—column shaft	NT 6541§	25	1					
Seal—oil—cross-shaft	ATJ 4161§	26	1	★	★			
Piece—distance	NT 5477§	27	1					
Drop-arm—steering	NT 7464§	28	1					
Bolt—drop-arm clamping	HBN 0824	29	1					
Nut—bolt	FNN 108	30	1					
Washer—spring—nut	LWN 208	31	1					

§ **Parts peculiar to Tractor only** **See title-page for application**

FRONT AXLE

	Page	Plate
DRAGLINK	MH 6	H 6
FRONT HUB (1st TYPE)	MH 1	H 1
FRONT HUB (2nd TYPE)	MH 4	H 4
MAIN AXLE BEAM (1st TYPE)	MH 1	H 1
MAIN AXLE BEAM (2nd TYPE)	MH 3	H 3
STUB AXLE (1st TYPE)	MH 1	H 1
STUB AXLE (2nd TYPE)	MH 3	H 3
TRACK ROD (1st TYPE)	MH 2	H 2
TRACK ROD (2nd TYPE)	MH 5	H 5
TRUNNION BRACKET (1st TYPE)	MH 2	H 2
TRUNNION BRACKET (2nd TYPE)	MH 5	H 5

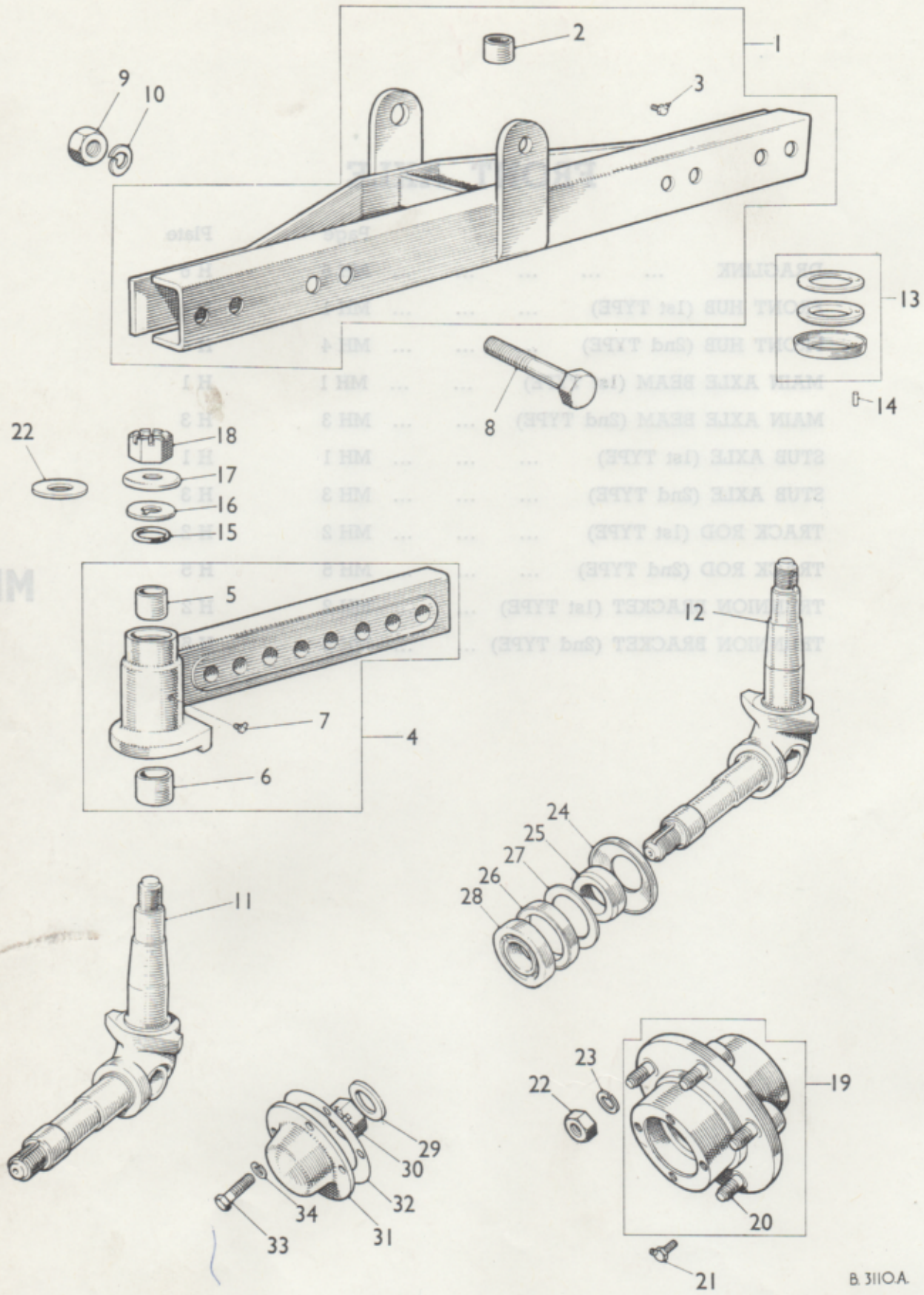

To face page MH 1

FRONT AXLE

DESCRIPTION		Part No.	Illus. No.	Quantity	Stock recommds. DIST. Exp.	Stock recommds. DIST. UK	Stock recommds. D	Change Point	REMARKS
Beam—axle—main		NT 4976§	1	1					
Bush		NT 3004§	2	2					
Greaser		UHN 305	3	1					
Beam—extending		NT 4978§	4	2					Not available; use NT 7115
Bush—small—upper		NT 3004§	5	2	★	★			
Bush—large—lower		NT 3005§	6	2	★	★			
Greaser		UHN 305	7	2					
Bolt—extending beam to main beam		HBN 1232	8	4					
Nut—bolt		FNN 112	9	4					
Washer—spring—nut		LWN 212	10	4					
Axle—stub—RH		NT 4871§	11	1	★	★			
Axle—stub—LH		NT 4872§	12	1					
Washer—thrust—lower		NT 1067§		2					Not available; use ATJ 4180
Washer—thrust—lower		NT 3118§		2					
Cup—thrust washer		NT 1069§		2					
Washer—thrust		ATJ 4180§	13	2	★	★			
Pin—thrust washer location		NT 3079§	14	6					
Ring—sealing—top		NT 4368§	15	2	★	★			
Washer—sealing ring		NT 4370§	16	2					
Cup—stub axle top	4DM	NT 1064§	17	2				DE1001 to 5127	
Nut—stub axle top		FNN 414	18	2					
Hub assembly—front		NT 4874§	19	2					Not available; use NT 7207 with 1 off NT 8330
Stud		NT 4876§	20	10	★	★			
Greaser		UHN 305	21	2					
Nut—wheel stud		FNZ 110	22	10					
Washer—spring—nut		LWN 210	23	10					
Cover—dust—stub axle	—	NT 1068§	24	2					
Piece—distance		NT 1076§	25	2					
Seal—oil		NT 3075§	26	2	★	★			
Washer—oil seal		NT 4371§	27	2					
Bearing—inner and outer		AMK 4134	28	4	★	★			Part No. change; was NT 3143
Washer—lock—bearing		NT 3124§	29	2					
Nut—slotted—stub axle		NT 5848§	30	2					
Cap—hub		NT 1079§	31	2					
Joint—cap		NT 5470§	32	2	★	★			
Screw—hub cap to hub		HNS 0608	33	8					
Washer—spring—screw		LWN 206	34	8					

§ **Parts peculiar to Tractor only** **See title-page for application**

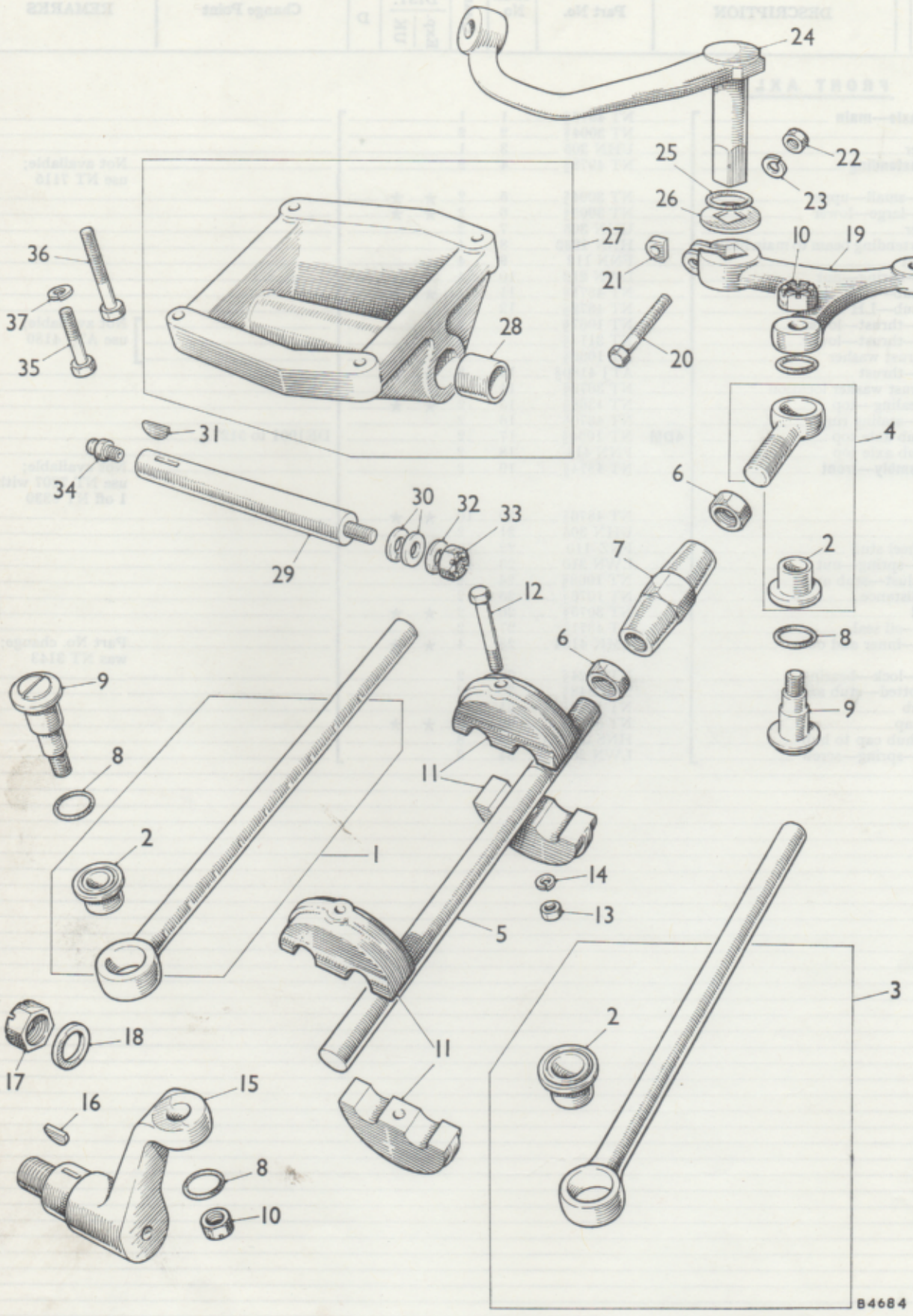

To face page MH 2

DESCRIPTION	Part No.	Illus. No.	Quantity	Stock recommds. DIST. Exp.	Stock recommds. DIST. UK	Stock recommds. D	Change Point	REMARKS
Front Axle—*continued*								
Rod—track	NT 4965§	1	1					
Bush	NT 6296§	2	1	★	★			
Rod—track	NT 4967§	3	2					
Bush	NT 6296§	2	2	★	★			
End—track rod	NT 4866§	4	1					
Bush	NT 6296§	2	1					
Rod—track adjuster	NT 4861§	5	1					
Nut—adjuster rod—LHT	NT 4865§	6	1					
Nut—adjuster rod—RHT	FNN 214	6	1					
Turnbuckle	NT 4862§	7	1					
Ring—sealing	NT 4375§	8	8	★	★			
Pin—track rod	NT 5925§	9	4	★	★			
Nut—slotted—pin	FNN 409	10	4					
Clamp—track rod	NT 2196§	11	8					
Bolt—clamp	HBN 0924	12	4					
Nut—bolt	FNN 109	13	4					
Washer—spring—nut	LWN 209	14	4					
Arm—track rod	NT 4873§		2					Not available; use NT 7332
Arm—track rod	NT 7332§	15	2					
Key—track rod arm	WKN 507	16	2					Part No. change. was NT 3047
Nut—slotted—track rod arm	FNN 312	17	2					
Washer—plain—nut	PWN 112	18	2					
Lever—articulating	**4DM** NT 1911§	19	1				DE1001 to 5127	
Bolt—lever clamping	NT 6029§	20	1					
Washer—'D' type—lever	NT 5126§	21	1					
Nut—clamping bolt	FNN 107	22	1					
Washer—spring—nut	LWN 207	23	1					
Lever and shaft—steering	NT 6110§	24	1					
Ring—sealing	NT 4368§	25	2	★	★			
Washer—sealing ring	NT 4365§	26	1					
Bracket—trunnion	NT 2464§	27	1					
Bush	NT 3004§	28	2					
Pin—trunnion	NT 4854§	29	1					
Washers—distance—pin								
·120″ (3·048 mm.)	NT 3093§	30	A/R					
·150″ (3·810 mm.)	NT 3094§	30	A/R					
·180″ (4·527 mm.)	NT 3095§	30	A/R					
·090″ (2·287 mm.)	NT 5635§	30	A/R					
Key—trunnion pin	WKN 505	31	1					Part No. change; was NT 3045
Washer—plain—pin	PWN 114	32	1					
Nut—slotted—trunnion pin	FNN 314	33	1					
Greaser	UHN 105	34	1					
Bolt—trunnion bracket to main frame	HBN 1226	35	2					
Bolt—trunnion bracket to main frame	HBN 1218	36	2					
Washer—spring—bolt	LWN 212	37	4					

§ **Parts peculiar to Tractor only**

See title-page for application

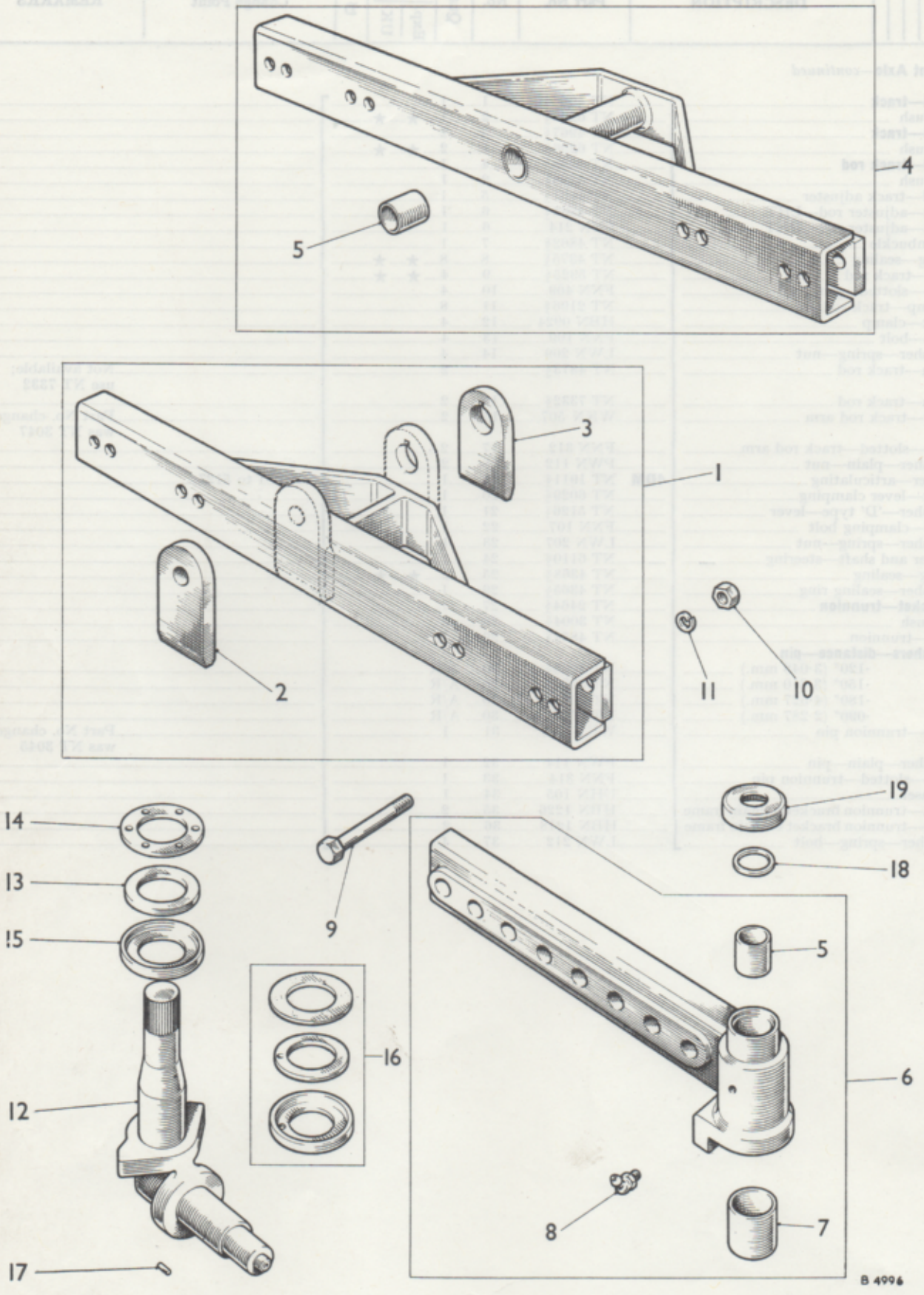

To face page MH 3

DESCRIPTION	Part No.	Illus. No.	Quantity	Stock recommds. DIST. Exp.	Stock recommds. DIST. UK	Stock recommds. D	Change Point	REMARKS
Front Axle—*continued*								
Beam—axle—main **4DM, 460**	NT 7363§		1				4DM–DE5128 on IDE10388 on 787–501 on 792–501 on 460–24000 to 25500	Not available; use ATJ 4148
Beam—axle—main **460, 10/60**	ATJ 4148§	1	1				460–25501 on †10/60–57420 on	
Bracket—front	NT 1054§	2	1					
Bracket—rear	NT 1055§	3	1					
Beam—axle—main **3DL, 342**	NT 8077§		1				3DL–771–501 on 772–501 on 342–24000 to 25500	Not available; use ATJ 4140
Beam—axle—main **342, 10/42**	ATJ 4140§	4	1				342–25501 on †10/42–57420 on	
Bush	NT 3004§	5	1	★	★			
Beam—extending	NT 7115§	6	2					
Bush—small—upper	NT 3004§	5	2	★	★			
Bush—large—lower	NT 3005§	7	2	★	★			
Greaser	UHN 105	8	2					
Bolt—extending beam to main beam	HBN 1232	9	4					
Nut—bolt	FNN 112	10	4					
Washer—spring—nut	LWN 212	11	4					
Axle—stub	ATJ 4000§		2				4DM–DE5128 on IDE10388 on 787–501 on 792–501 on 3DL–771–501 on 772–501 on 342–24000 to 24826 460–24000 to 24826	Not available; use ATJ 4129
Axle—stub	ATJ 4129§	12	2	★	★		342–24827 on 460–24827 on †10/42–57420 on †10/60–57420 on	
Washer—thrust	NT 1067§	13	2				4DM–DE5128 on IDE10388 on 787–501 on 792–501 on 3DL–771–501 on 772–501 on 342–24000 to 36179 460–24000 to 36179	Not available; use ATJ 4180
Washer—thrust	NT 3118§	14	2					
Cup—thrust washer	NT 1069§	15	2					
Washer—thrust	ATJ 4180§	16	2	★	★		342–36180 on 460–36180 on †10/42–57420 on †10/60–57420 on	
Pin—thrust washer locating	NT 3079§	17	4					
Ring—sealing—top	†TRS 2024§	18	2	★	★			Part No. change; was NT 6538
Cover—top	NT 7114§	19	2					

§ Parts peculiar to Tractor only

See title-page for application

†Revised Information—Issue 2

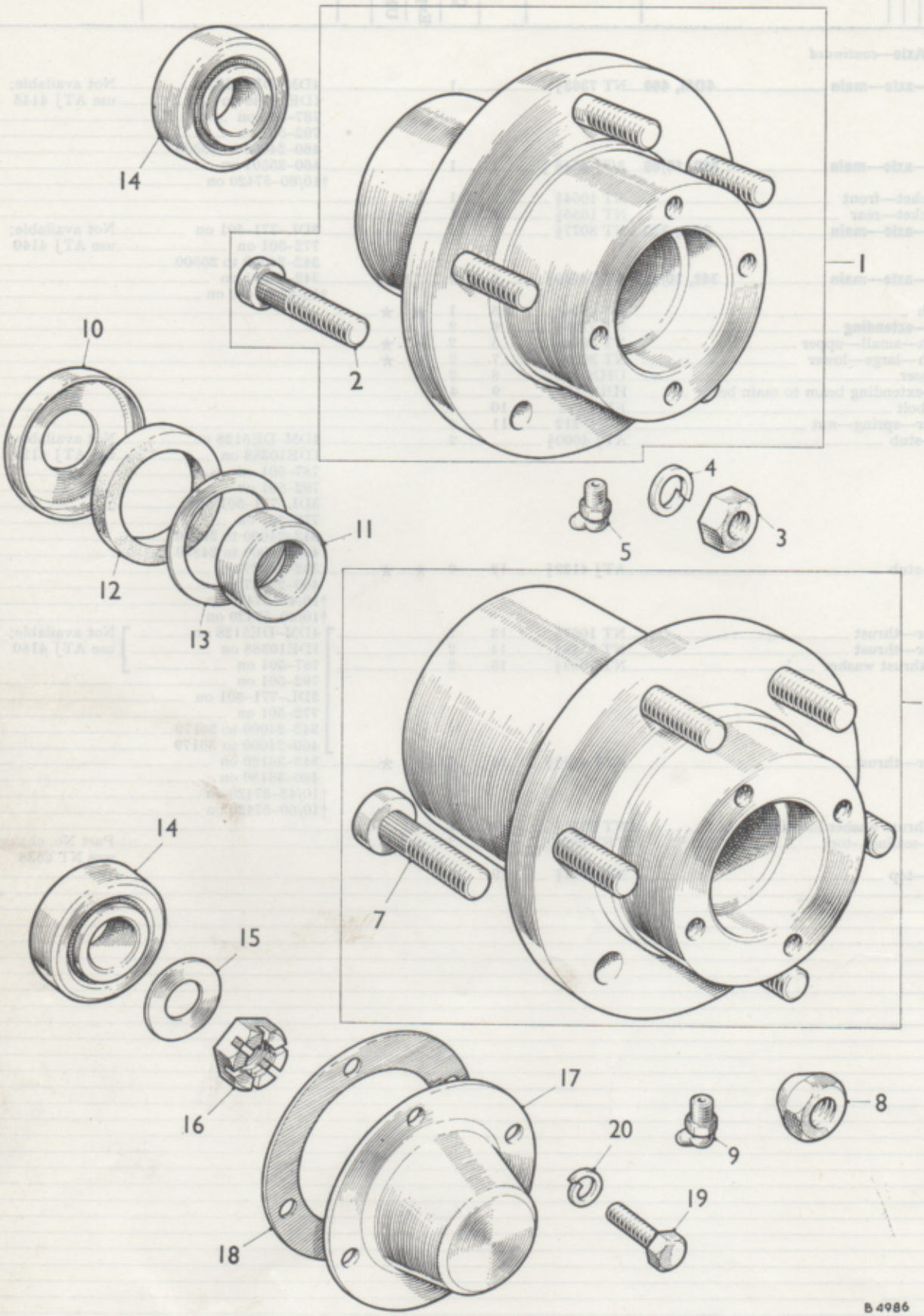
14
1
2
10
11
12
13
4
5
3
6
7
14
15
16
17
18
20
9
19
8
B 4986

DESCRIPTION	Part No.	Illus. No.	Quantity	Stock recommds. DIST. Exp.	Stock recommds. DIST. UK	Stock recommds. D	Change Point	REMARKS
Front Axle—*continued*								
Hub assembly—front	NT 7388§		2					Not available; use component parts
Hub sub-assembly	NT 4874§	1	2					Not available; use NT 7207
Stud—wheel	NT 4876§	2	10	★	★		4DM–DE5128 on	
Nut—wheel stud	FNZ 110	3	10	★	★		IDE10388 on	
Washer—spring—nut	LWN 210	4	10					
Greaser	UHN 305	5	2					
Hub assembly—front	NT 7442§		2					Not available; use component parts
Hub sub-assembly	NT 7207§	1	2				4DM–787–501 to 976	
Stud—wheel	NT 7209§	2	10	★	★		792–501 to 760	
Nut—wheel stud	NT 7430§	3	10	★	★			
Washer—spring—nut	LWN 210	4	10					
Greaser	UHN 305	5	2					
Hub assembly—front	ATJ 9297§		2				4DM–787–977 on 792–761 on	Not available; use component parts
Hub sub-assembly	NT 7207§	1	2				3DL–771–501 on	
Stud—wheel	NT 7209§	2	10	★	★		772–501 on	
Nut—wheel stud	NT 8330§	3	10	★	★		342–24000 to 30125	
Washer—spring—nut	LWN 210	4	10				460–24000 to 30125	
Greaser	UHN 305	5	2					
Hub assembly—front	ATJ 9423§		2					Not available; use use component parts
Hub sub-assembly	ATJ 4155§	6	2				342–30126 on 460–30126 on	
Stud—wheel	ATJ 4045§	7	12	★	★		10/42–30126 on	
Nut—wheel stud	ATJ 4046§	8	12	★	★		10/60–30126 on	
Greaser	UHN 405	9	2					
Cup—retaining	NT 1068§	10	2					
Piece—distance	NT 1076§	11	2					
Seal—oil	NT 3075§	12	2	★	★			
Washer—seal protection	NT 4371§	13	2					
Bearing—inner and outer	AMK 4134	14	4	★	★			Part No. change; was NT 3143
Washer—tongue	NT 3124§	15	2					
Nut—slotted	NT 5848§	16	2					
Cap—front hub	NT 1079§	17	2				4DM–DE5128 on	
Joint—cap	NT 5470§	18	2	★	★		IDE10388 on	
Screw—cap to hub	HNS 0608	19	8				787–501 on	
Washer—spring—screw	LWN 206	20	8				792–501 on 3DL–771–501 on 772–501 on 342–24000 to 30126 460–24000 to 30126	
Cap—front hub	ATJ 4043§	17	2				342–30127 on	
Joint—cap	ATJ 4044§	18	2	★	★		460–30127 on	
Screw—cap to hub	HNS 0506	19	8				10/42–30127 on	
Washer—spring—screw	LWN 205	20	8				10/60–30127 on	

§ **Parts peculiar to Tractor only** **See title-page for application**

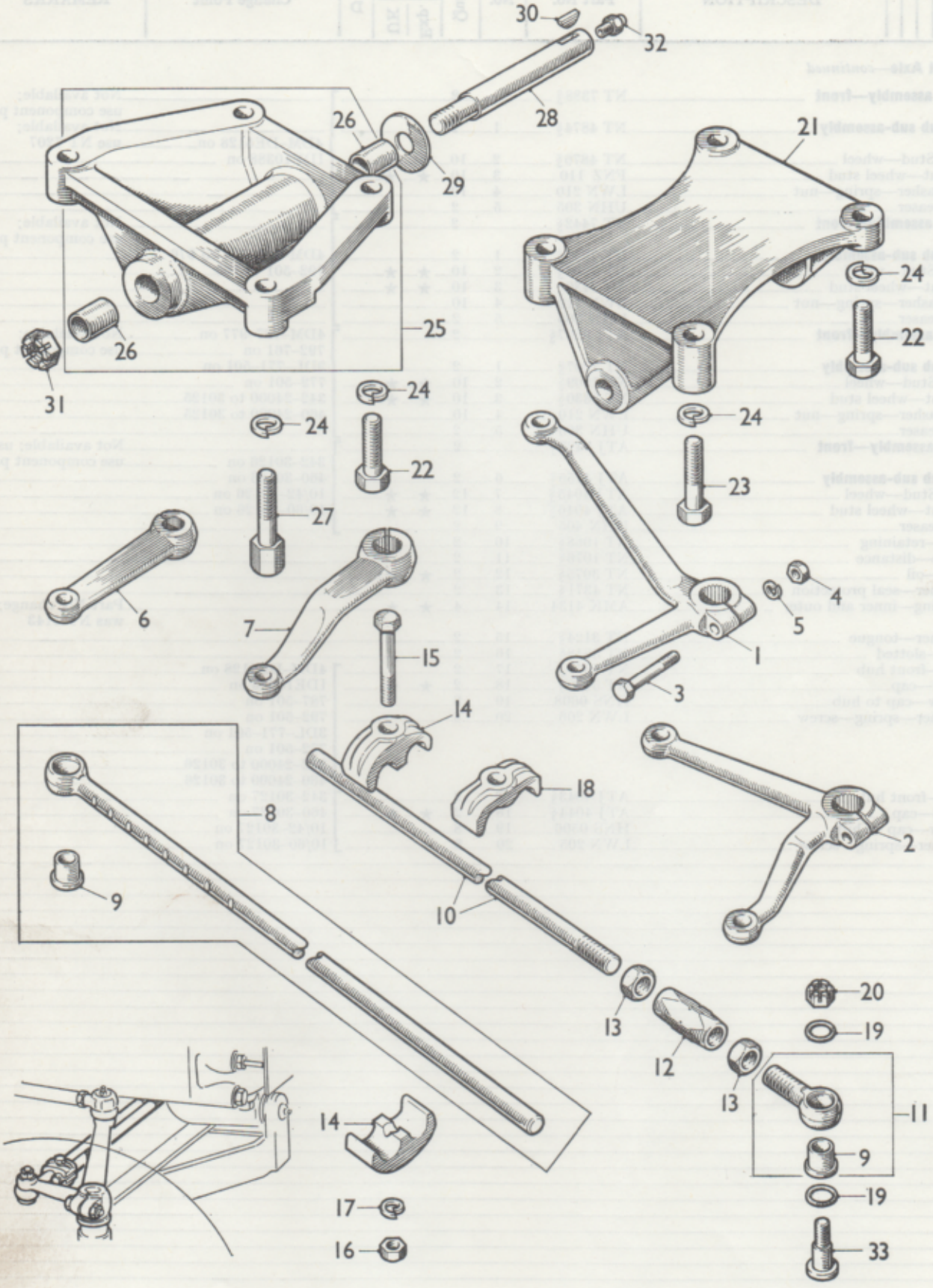

To face page MH 5

DESCRIPTION	Part No.	Illus. No.	Quantity	Stock recommds. DIST. Exp.	Stock recommds. DIST. UK	Stock recommds. D	Change Point	REMARKS
Front Axle—*continued*								
Lever—steering and track-rod—RH **4DM, 460, 10/60**	NT 7066§	1	1					
Lever—steering and track-rod—RH **3DL, 342, 10/42**	NT 8080§	2	1					
Bolt—lever to stub axle	HBN 0824	3	1					
Nut—bolt	FNN 108	4	1					
Washer—spring—nut	LWN 208	5	1					
Lever—track-rod—LH **4DM, 460, 10/60**	NT 7067§	6	1					
Lever—track-rod—LH **3DL, 342, 10/42**	NT 8081§	7	1					
Bolt—lever to stub axle	HBN 0824	3	1					
Nut—bolt	FNN 108	4	1					
Washer—spring—nut	LWN 208	5	1					
Rod—track **4DM**	NT 7101§		2				4DM–DE5128 to 10387	Not available; use 1 off NT 8163, NT 8162, NT 4866, NT 4862, FNN 214, NT 4865
Bush **4DM**	NT 6296§		2	★	★		IDE10388 to 13577	
Rod—track—RH	†NT 8163§	8	1					
Bush	†NT 6296§	9	1	★	★		4DM–IDE13578 on	
Rod assembly—track—LH	†ATJ 9252§		1				787–501 on	Not available;
							792–501 on	use component part
Rod—track	†NT 8162§	10	1				3DL–771–501 on	
Bar—joint	†NT 4866§	11	1				772–501 on	
Bush	†NT 6296§	9	1				460–24000 on	
Nut—adjusting	†NT 4862§	12	1				342–24000 on	
Nut—lock—RHT	†FNN 214	13	1				10/42–57420 on	
Nut—lock—LHT	†NT 4865§	13	1				10/60–57420 on	
Clamp—track-rod	NT 2196§	14	4				4DM–DE5128 on	
Bolt—clamp	HBN 0924	15	2				IDE10388 on	
Nut—bolt	FNN 109	16	2				787–501 on	
Washer—spring—nut	LWN 209	17	2				792–501 on	
							3DL–771–501 on	
							772–501 on	
							460–24000 to 25776	
							342–24000 to 25776	
Clamp—track-rod	†NT 2196§	14	2				342–25777 on	
Clamp—track-rod	†ATJ 4142§	18	2				460–25777 on	
Bolt—clamp	†HBN 0918	15	2				10/42–57420 on	
Washer—spring—bolt	†LWN 209	17	2				10/60–57420 on	
Pin—link—track-rod lever	NT 5925§	33	2	★	★			
Ring—sealing—pin	†TRS 1620	19	4	★	★			Part No. change; was NT 4375
Nut—slotted—pin	FNN 409	20	2					
Bracket—pivot **3DL, 342, 10/42**	NT 8073§	21	1					
Bolt—bracket to main frame **3DL, 342, 10/42**	HBN 1218	22	2					
Bolt—bracket to main frame **3DL, 342, 10/42**	HBN 1226	23	2					
Washer—spring—bolt **3DL, 342, 10/42**	LWN 212	24	4					
Bracket—trunnion **4DM, 460, 10/60**	NT 2464§	25	1					
Bush **4DM, 460, 10/60**	NT 3004§	26	2					
Bolt—bracket to main frame **4DM, 460, 10/60**	HBN 1218	22	2					
Bolt—bracket to main frame **4DM, 460, 10/60**	NT 6589§	27	2					
Washer—spring—bolt **4DM, 460, 10/60**	LWN 212	24	4					
Pin—trunnion	NT 4854§	28	1					
Washers—distance								
·090″ (2·287 mm.)	†NT 5635§	29	A/R					Correction; was NT 3635
·120″ (3·048 mm.)	NT 3093§	29	A/R					
·150″ (3·810 mm.)	NT 3094§	29	A/R					
·180″ (4·572 mm.)	NT 3095§	29	A/R					
Key—trunnion pin	WKN 505	30	1					Part No. change; was NT 3045
Nut—slotted—pin	FNN 314	31	1					
Greaser	UHN 105	32	1					

§ **Parts peculiar to Tractor only** **See title-page for application** †**Revised Information—Issue 2**

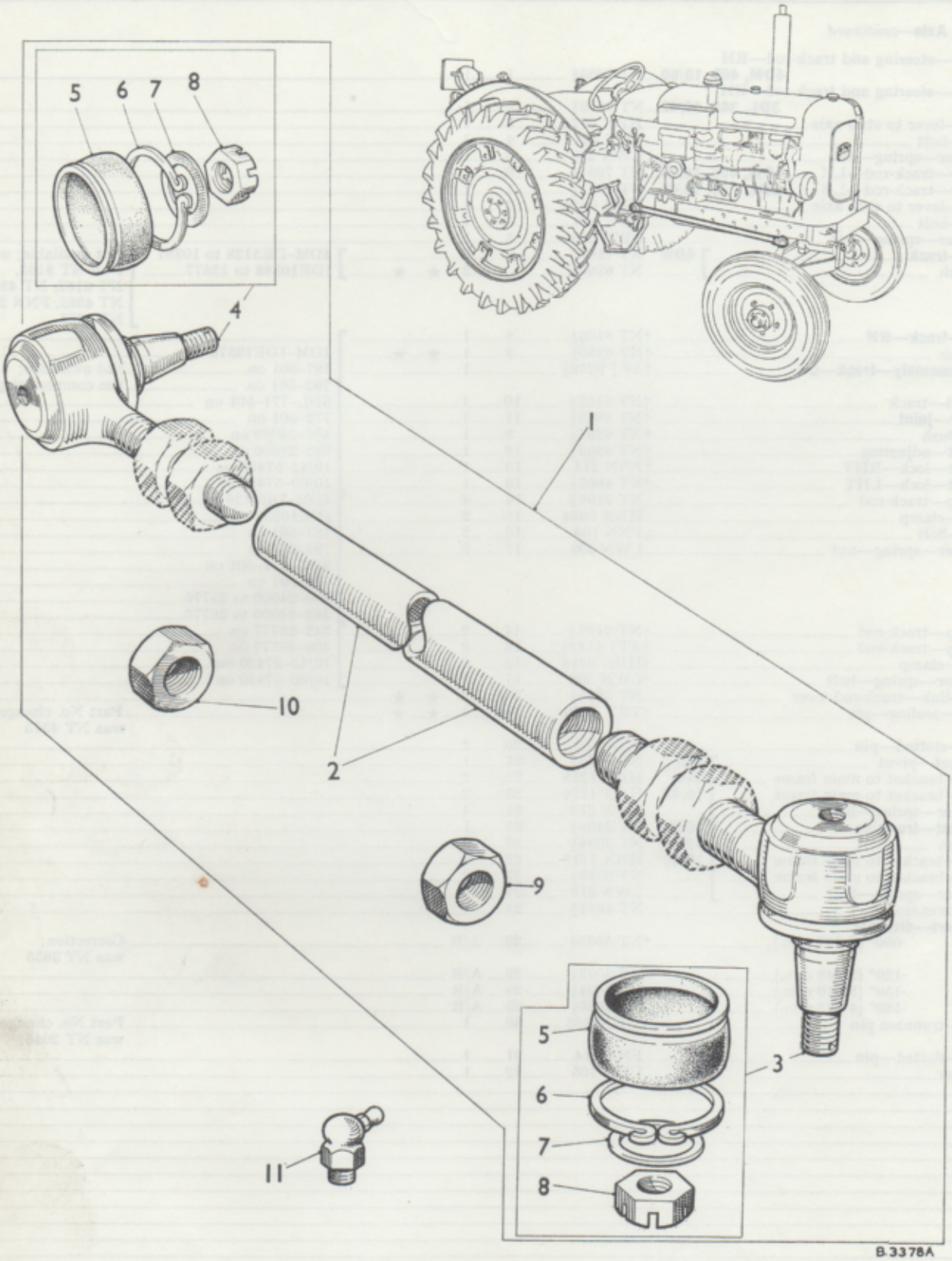

To face page MH 6

DESCRIPTION	Part No.	Illus. No.	Quantity	Stock recommds. DIST. Exp.	Stock recommds. DIST. UK	Stock recommds. D	Change Point	REMARKS
Front Axle—*continued*								
Draglink assembly **4DM**	NT 6952§		1				DE1001 to 5127	Not available; use 27H 2433
	27H 2433§	1	1					
	NT 7119§	1	1				DE5128 to 10387	
							IDE10388 to 15890	
4DM, 460, 10/60	NT 8219§	1	1				4DM–IDE15891 on	
							787–501 on	
							792–501 on	
							460–24000 on	
							10/60–57420 on	
3DL, 342, 10/42	†NT 8284§	1	1					Correction; was NT 8248
Tube—intermediate **4DM**	NT 6953§	2	1				DE1001 to 5127	
4DM	NT 7120§	2	1				DE5128 to 10387	
							IDE 10388 to 15890	
4DM, 460, 10/60	NT 7376§	2	1				4DM–IDE15891 on	
							787–501 on	
							792–501 on	
							460–24000 on	
							10/60–57420 on	
3DL, 342, 10/42	NT 8110§	2	1					
Socket assembly—RH	7H 3656§	3	1	★	★			
Socket assembly—LH	7H 3657§	4	1	★	★			
Boot (rubber)	7H 3465	5	2	★	★			
Clip	†AAA 6027	6	2					Part No. change; was 7H 3466
Washer—boot	7H 3552	7	2					
Nut—ball pin	FNZ 408	8	2					
Locknut—RHT	FNZ 212	9	1					
Locknut—LHT	FNZ 2212	10	1					
Greaser	UHN 105	11	2					

§ **Parts peculiar to Tractor only** **See title-page for application** †**Revised Information—Issue 2**

BRAKE LINKAGE

	Page	Plate
BRAKE OPERATING RODS (3DL, 4DM, 342, 460)	MJ 3	J 2
BRAKE OPERATING RODS (10/42, 10/60) ...	MJ 6	J 4
BRAKE PEDALS (3DL, 4DM, 342, 460) ...	MJ 1	J 1
BRAKE PEDALS (10/42, 10/60)	MJ 6	J 4
BRAKE PEDAL SUPPORT BRACKET (3DL, 4DM, 342, 460)	MJ 1	J 1
BRAKE PEDAL SUPPORT BRACKET (10/42, 10/60)	MJ 6	J 4
FOOTBRAKE LEVER SHAFTS (3DL, 4DM, 342, 460)	MJ 1, MJ 2	J 1
FOOTBRAKE LEVER SHAFTS (10/42, 10/60)	MJ 6	J 4
HANDBRAKE (3DL, 4DM, 342, 460)	MJ 4, MJ 5	J 3
HANDBRAKE (10/42, 10/60)	MJ 7	J 5
PARKING BRAKE LATCH	MJ 5	J 3

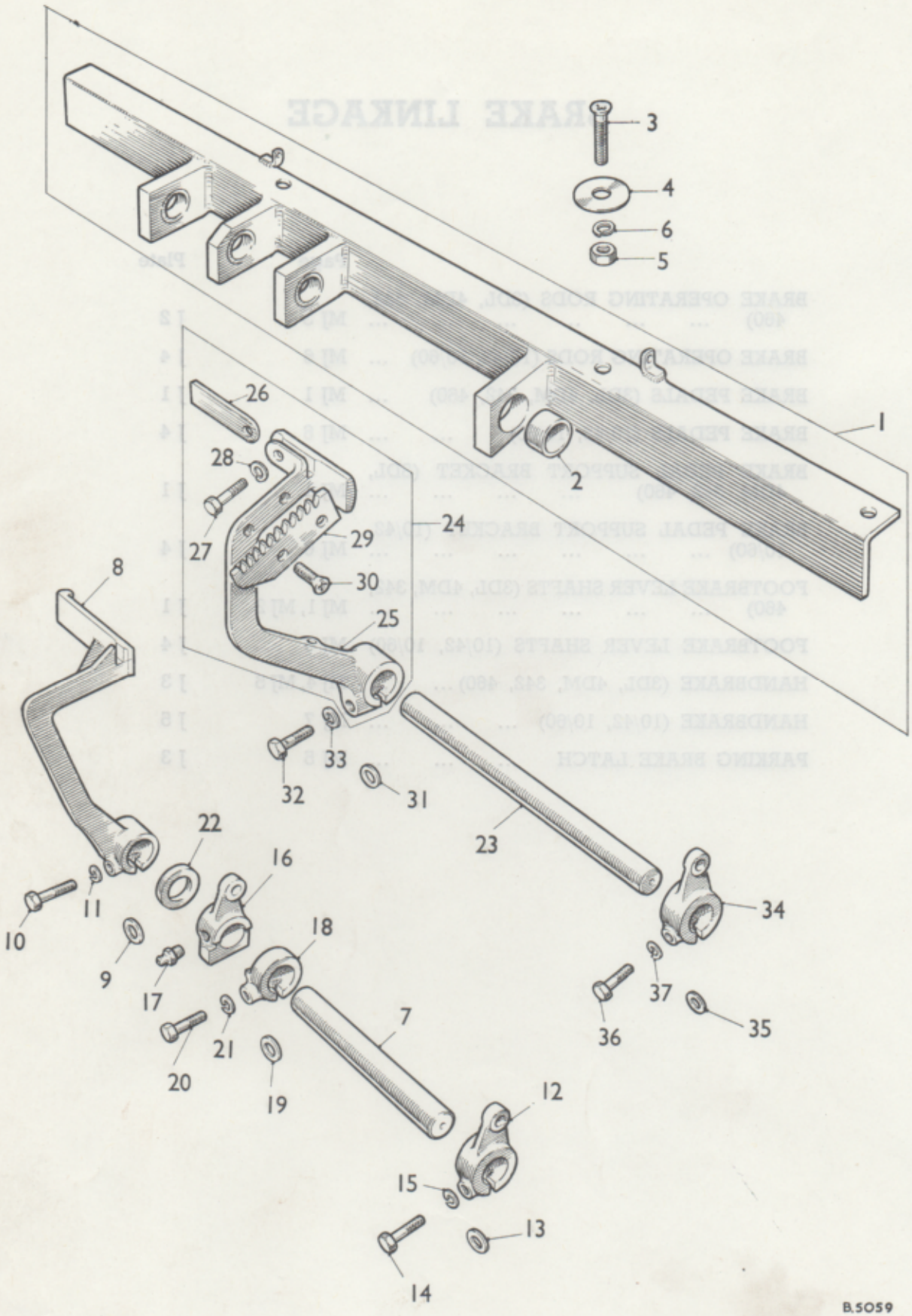

To face page MJ 1

BRAKE LINKAGE

DESCRIPTION	Part No.	Illus. No.	Quantity	Stock recommds. DIST. Exp.	Stock recommds. DIST. UK	Stock recommds. D	Change Point	REMARKS
Bracket—brake pedal support	NT 5957§		1				4DM–DE1001 to 5936	Not available; use NT 7576
Bracket—brake pedal support	NT 7576§	1	1				4DM–DE5937 on IDE10388 on 787–501 on 792–501 on 3DL–771–501 on 772–501 on 342–24000 on 460–24000 on	
Bush	LBS 1812	2	4					
Screw—bracket to gearbox	CMN 0728	3	2				4DM–DE1001 on IDE10388 on 787–501 on 792–501 on 3DL–771–501 on 772–501 on 342–24000 on 460–24000 on	
Washer—plain—screw	AJD 7252 N	4	2					
Nut—screw	FNN 107	5	2					
Washer—spring—nut	LWN 207	6	2					
Shaft—brake pedal—short	NT 5963§	7	1					
Pedal—brake—RH	NT 5602§	8	1					
Key—pedal to shaft	NT 5955§	9	1					
Bolt—pedal clamping	HBN 0618	10	1					
Washer—spring—bolt	LWN 206	11	1					
Lever—shaft—footbrake—RH	NT 5599§		1				4DM–DE1001 to 5936	
	NT 7175§		1				4DM–DE5937 to 10387	Not available; use NT 8060
	NT 8060§	12	1				4DM–IDE10388 on 787–501 on 792–501 on 3DL–771–501 on 772–501 on 342–24000 on 460–24000 on	
Key—lever to shaft	NT 5955§	13	1					
Bolt—lever clamping	HBN 0615§	14	1				4DM–DE1001 on IDE10388 on 787–501 on 792–501 on 3DL–771–501 on 772–501 on 342–24000 on 460–24000 on	
Washer—spring—bolt	LWN 206	15	1					
Lever—shaft—handbrake	NT 6144§	16	1					
Greaser	UHN 105	17	1					
Dog—lever	NT 6145§	18	1					
Key—dog to shaft	NT 5955§	19	1					
Bolt—dog clamping	HBN 0615	20	1					
Washer—spring—bolt	LWN 206	21	1					
Piece—distance	NT 5964§	22	1					
Shaft—brake pedal—long	NT 5966§	23	1					
Pedal—brake—LH	NT 5600§		1					Not available; use NT8348 with 1 off NT 1682 and 1 off HBN 0510
Pedal	NT 5601§		1				4DM–DE1001 to 10387 IDE10388 on	Not available; use NT 8348
Latch	NT 1682§		1					
Bolt—latch to pedal	HBN 0510		1					
Washer—spring—bolt	LWN 205		1					
Pedal—brake—LH	NT 8353§	24	1				4DM–787–501 on	
Pedal	NT 8348§	25	1				792–501 on	
Latch	NT 1682§	26	1				3DL–771–501 on	
Bolt—latch to pedal	HBN 0510	27	1				772–501 on	
Washer—spring—bolt	LWN 205	28	1				342–24000 on	
Ratchet—pedal	NT 8349§	29	1				460–24000 on	
Screw—ratchet to pedal	CMN 0412	30	1					

§ **Parts peculiar to Tractor only**

See title-page for application

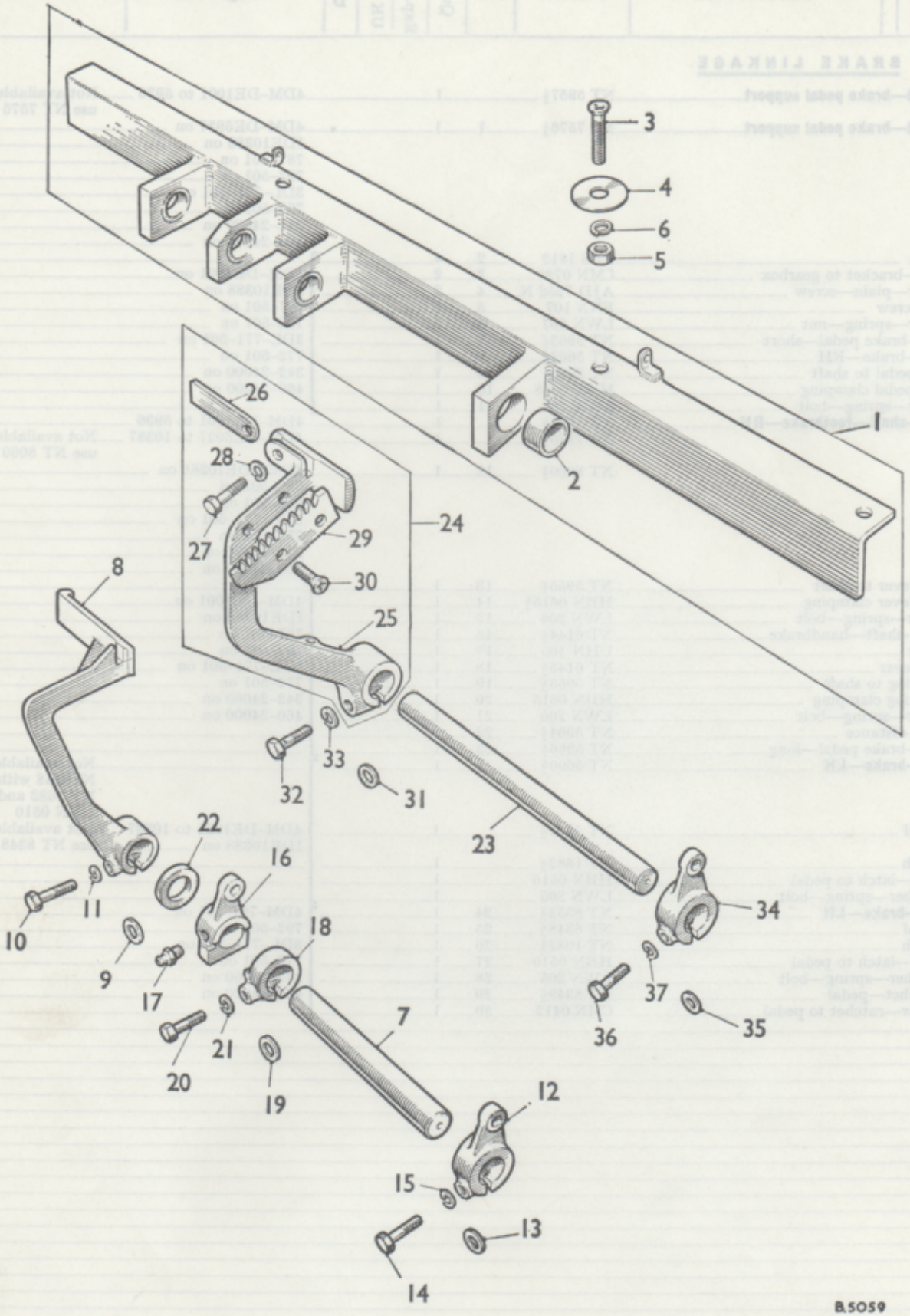

To face page MJ 2

DESCRIPTION	Part No.	Illus. No.	Quantity	Stock recommds. DIST. Exp.	Stock recommds. DIST. UK	Stock recommds. D	Change Point	REMARKS
Brake Linkage—*continued*								
Key—brake pedal to shaft	NT 5955§	31	1					
Bolt—pedal clamping	HBN 0618	32	1					
Washer—spring—bolt	LWN 206	33	1					
Lever—shaft—footbrake—LH	NT 5599§	34	1				4DM–DE1001 to 5936	
	NT 7176§	34	1				4DM–DE5937 to 10387	Not available; use NT 8061
	NT 8061§	34	1				4DM–IDE10388 on 787–501 on 792–501 on 3DL–771–501 on 772–501 on 342–24000 on 460–24000 on	
Key—lever to shaft	NT 5955§	35	1				4DM–DE1001 on IDE10388 on 787–501 on 792–501 on 3DL–771–501 on 772–501 on 342–24000 on 460–24000 on	
Bolt—lever clamping	HBN 0615	36	1					
Washer—spring—bolt	LWN 206	37	1					

§ Parts peculiar to Tractor only

See title-page for application

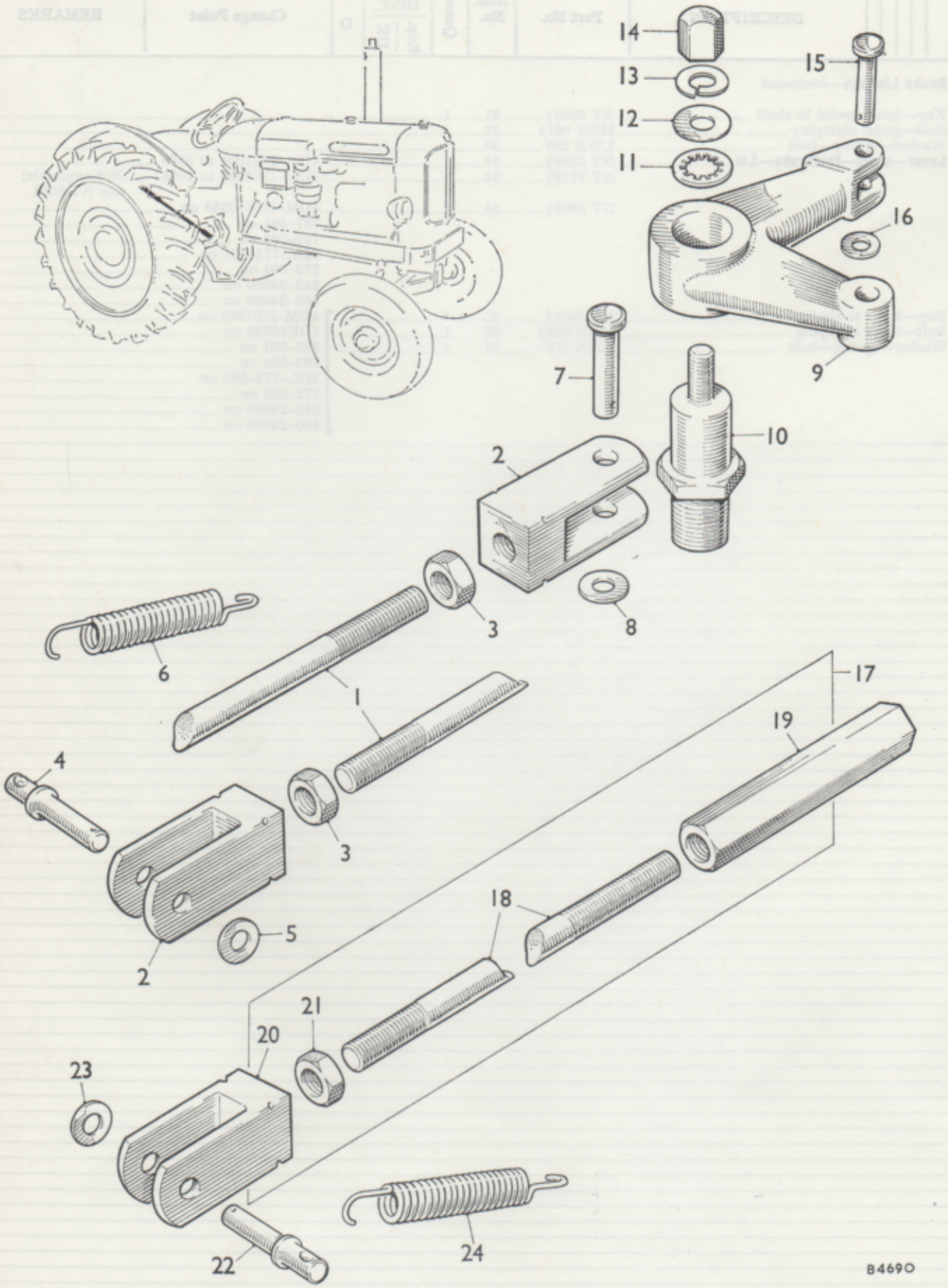

To face page MJ 3

DESCRIPTION	Part No.	Illus. No.	Quantity	Stock recommds. DIST. Exp.	Stock recommds. DIST. UK	Stock recommds. D	Change Point	REMARKS
Brake Linkage—*continued*								
Rod—cross-shaft to bell-crank lever	NT 5586§	1	1					
Jaw—rod	NT 5545§	2	2					
Nut—jaw	FNN 106	3	2					
Pin—jaw to cross-shaft lever	NT 2050§	4	2					
Washer—plain—pin	PWN 105	5	2					
Spring—pull-off	NT 3287§	6	2	★	★			
Pin—jaw to bell-crank lever	NT 3033§	7	2					
Washer—plain—pin	PWN 105	8	2					
Lever—bell-crank	NT 1678§	9	2				4DM–DE1001 to 5936	
Pivot—bell-crank lever	NT 5598§	10	2					
Washers—pivot								
Shakeproof	LWN 410	11	2					
Plain	NT 3085§	12	2					
Spring	LWN 206	13	2					
Nut—domed—pivot	NT 5596§	14	2					
Pin—bell-crank lever to brake drawlink	NT 3034§	15	2					
Washer—plain—pin	PWN 105	16	2					
Rod—cross-shaft to brake operating rod	NT 7212§	17	2				4DM–DE5937 on	
Rod	NT 6975§	18	2				IDE10388 on	
Adjuster—rod	NT 6974§	19	2				787–501 on	—
Jaw—rod to brake lever	NT 5545§	20	2				792–501 on	—
Nut—jaw	FNN 106	21	2				3DL–771–501 on	—
Pin—jaw	NT 2050§	22	2				772–501 on	
Washer—plain—pin	PWN 105	23	4				342–24000 on	
Spring—Pull-off	NT 3285§	24	2	★	★		460–24000 on	

§ **Parts peculiar to Tractor only** **See title-page for application**

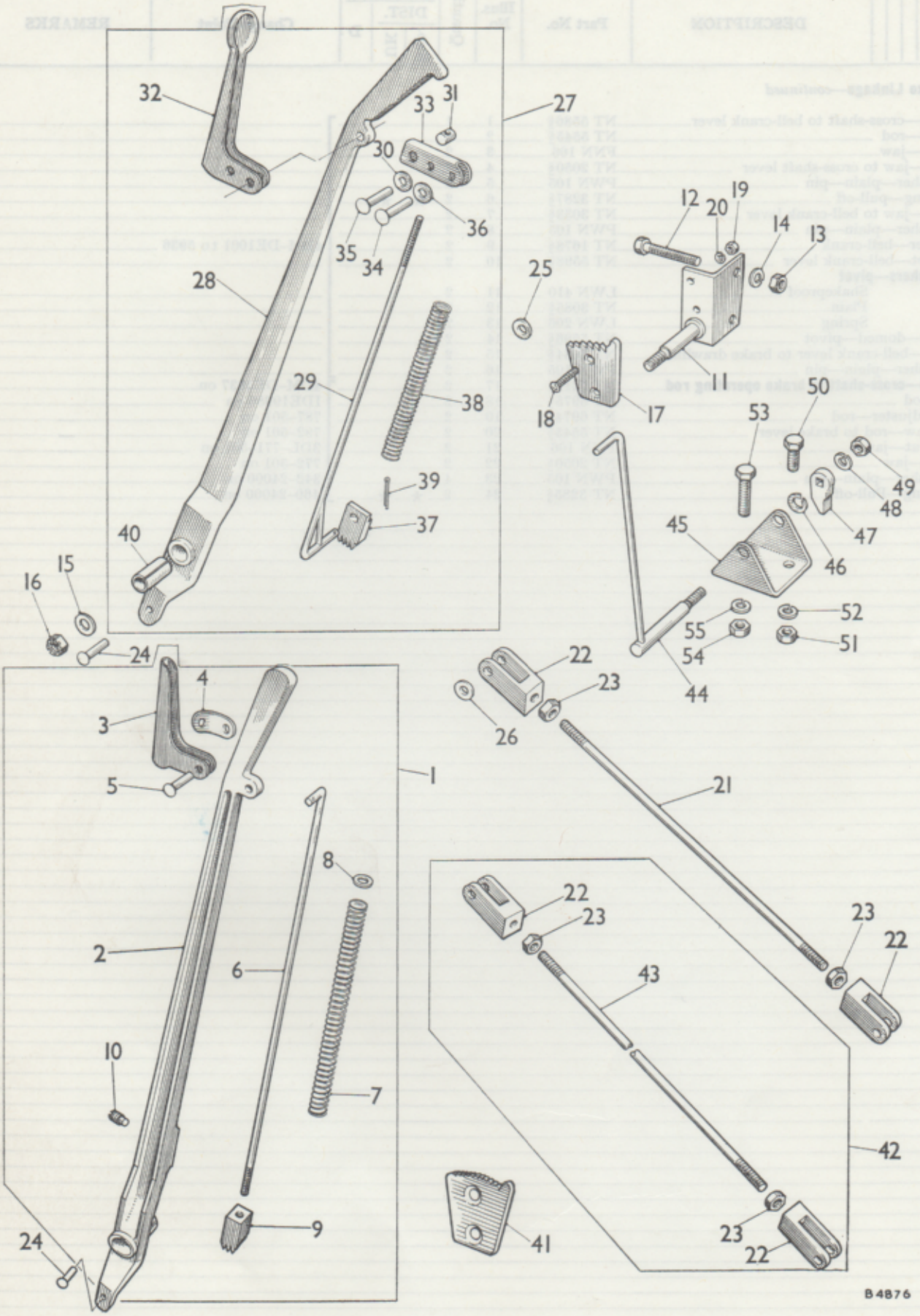

To face page MJ 4

DESCRIPTION	Part No.	Illus. No.	Quantity	Stock recommds. DIST. Exp.	Stock recommds. DIST. UK	Stock recommds. D	Change Point	REMARKS
Brake Linkage—*continued*								
Handbrake assembly	V 6268 A	1	1					Part No. change; was NT 4883
Lever—handbrake	NT 4884§	2	1					
Trigger	AAA 4411	3	1					Part No. change; was NT 4885
Spring plate—trigger	NT 4887§		1					Not available; use CB 2015
Spring plate—trigger	CB 2015	4	1					
Pin—trigger	NT 4886§		1					Not available; use CA 1252
Pin—trigger	CA 1252	5	1					
Rod—pawl	V 547	6	1					Part No. change; was NT 4888
Spring—pawl rod	NT 4891§		1					Not available; use AMK 3214
Spring—pawl rod	AMK 3214	7	1					
Washer—plain	PWN 103	8	1					
Pawl	V 6203	9	1	★	★		4DM–DE1001 to 3297	Part No. change; was NT 4889
Screw—pawl fixing	ATJ 9345§	10	1					
Bracket—handbrake support	NT 5546§	11	1					Not available; use NT 7472
Bolt—bracket to gearbox casing and frame	NT 5548§	12	2					
Nut—bolt	†ATJ 1081§	13	2					Part No. change; was FNN 109
Washer—spring—nut	LWN 209	14	4					
Washer—plain—handbrake lever pivot	PWN 110	15	1					
Nut—slotted—lever pivot	FNN 410	16	1					
Ratchet	NT 5556§	17	1	★	★			
Screw—ratchet to support bracket	CMN 0616	18	2					
Nut—screw	FNN 106	19	2					
Washer—spring—nut	LWN 206	20	2					
Rod—lever to cross-shaft	NT 5544§	21	1					
Jaw—rod	NT 5545§	22	2					
Nut—lock—jaw	FNN 106	23	2					
Pin—jaw	NT 3033§	24	2					
Washer—plain—pin	PWN 105	25	2					
Washer—Thackeray—hand lever end	AJD 7731	26	1					
Handbrake assembly	†NT 6644§	27	1					Not available; use ATJ 5079 for details see page MJ 7
Lever—handbrake	AAK 3000	28	1					
Rod—pawl	AAK 5328	29	1					Part No. change; was AAK 3001
Washer	AAK 3002	30	2					
Nipple—pawl rod	AAK 3003	31	1				4DM–DE3298 on	
Latch	AAK 3004	32	1				IDE10388 on	
Arm—pivot—latch	AAK 3005	33	1				787–501 on	
Rivet—latch	RRS 0412	34	1				†792–501 on 3DL–771–501 on	Part No. change; was AAK 3006
Rivet—latch	RRS 0316	35	1				772–501 on 460–24000 on 342–24000 on	Part No. change; was AAK 3007
Washer (fibre)	AAK 3008	36	2					
Pawl	AAK 5329	37	1	★	★			Part No. change; was AAK 3009
Spring	AMK 3214	38	1	★	★			
Pin—cotter	CPS 0204	39	1					
Bush—liner	AMK 3213	40	1					

§ Parts peculiar to Tractor only

See title-page for application

†Revised Information—Issue 2

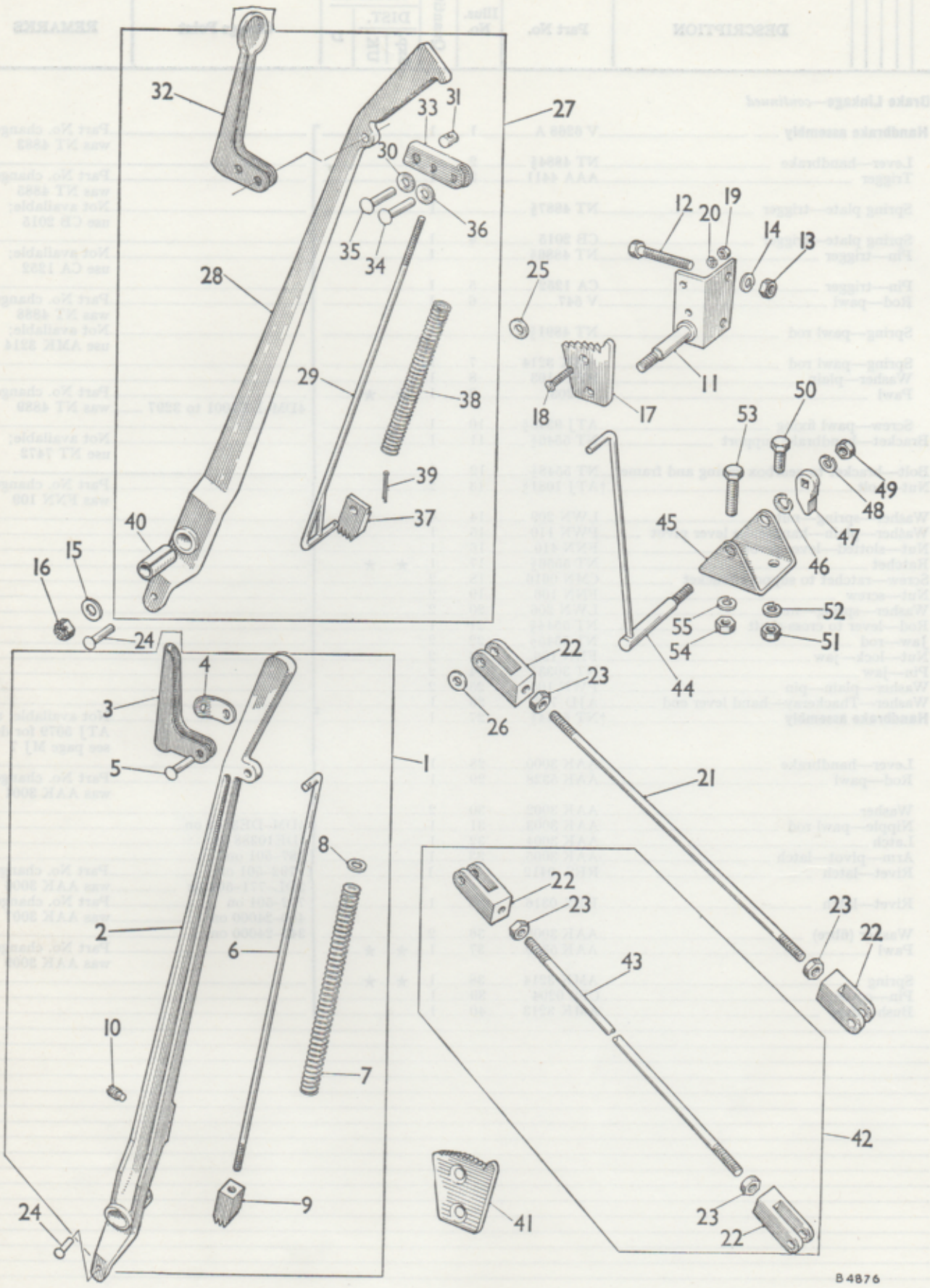
32
33
31
27
30
36
35
34
28
29
38
39
37
40
15
16
24
12
20
19
14
13
25
11
18
17
50
53
49
48
47
45
46
52
55
51
54
44
22
23
26
4
3
5
1
21
8
2
6
10
7
9
24
22
23
43
23
22
42
41
23
22
B4876

DESCRIPTION	Part No.	Illus. No.	Quantity	Stock recommds. DIST. Exp.	Stock recommds. DIST. UK	Stock recommds. D	Change Point	REMARKS
Brake Linkage—*continued*								
Bracket—hand brake support	NT 7086§		1				4DM–DE3298 to 10387	Not available; use NT 7472
Bracket—hand brake support	NT 7472§	11	1				4DM–IDE10388 on 787–501 on 792–501 on 3DL–771–501 on 772–501 on 460–24000 on 342–24000 on	
Bolt—bracket to gearbox casing and frame	NT 5548§	12	2					
Nut—bolt	†ATJ 1081§	13	2					Part No. change; was FNN 109
Washer—spring—nut	LWN 209	14	4					
Washer—plain—hand brake lever pivot	PWN 110	15	1					
Nut—slotted—lever pivot	FNN 410	16	1				4DM–DE3298 on	
Ratchet	NT 7083§	41	1	★		★	IDE10388 on	
Screw—ratchet to support bracket	CMN 0616	18	2				787–501 on	
Nut—screw	FNN 106	19	2				792–501 on	
Washer—spring—nut	LWN 206	20	2				3DL–771–501 on	
Rod assembly—lever to cross-shaft	NT 7474§	42	1				772–501 on	
Rod	NT 7473§	43	1				460–24000 on	
Jaw—rod	NT 5545§	22	2				342–24000 on	
Nut—lock—law	FNN 106	23	2					
Pin—jaw	NT 3033§	24	2					
Washer—plain—pin	PWN 105	25	2					
Washer—Thackeray—hand lever end	AJD 7731	26	1					
Latch assembly—parking	ATJ 9291§		1					Not available; use component parts
Lever—pawl operating	NT 8114§	44	1					
Bracket—lever	NT 8350§	45	1					
Washer—spacing	PWN 109	46	1				4DM–787–501 on	
Pawl	NT 2336§	47	1	★		★	792–501 on	
Washer—spring—pawl to lever	LWN 205	48	1				3DL–771–501 on	
Nut—pawl to lever	FNN 105	49	1				772–501 on	
Bolt—bracket to gearbox casing	HBN 0714	50	1				460–24000 on	
Nut—bolt	FNN 107	51	1				342–24000 on	
Washer—spring—nut	LWN 207	52	1					
Bolt—bracket to gearbox casing	†ATJ 1079§	53	1					Part No. change; was HBN 0916
Nut—bolt	†ATJ 1081§	54	1					Part No. change; was FNN 109
Washer—spring—nut	LWN 209	55	1					

§ Parts peculiar to Tractor only

See title-page for application

†Revised Information—Issue 2

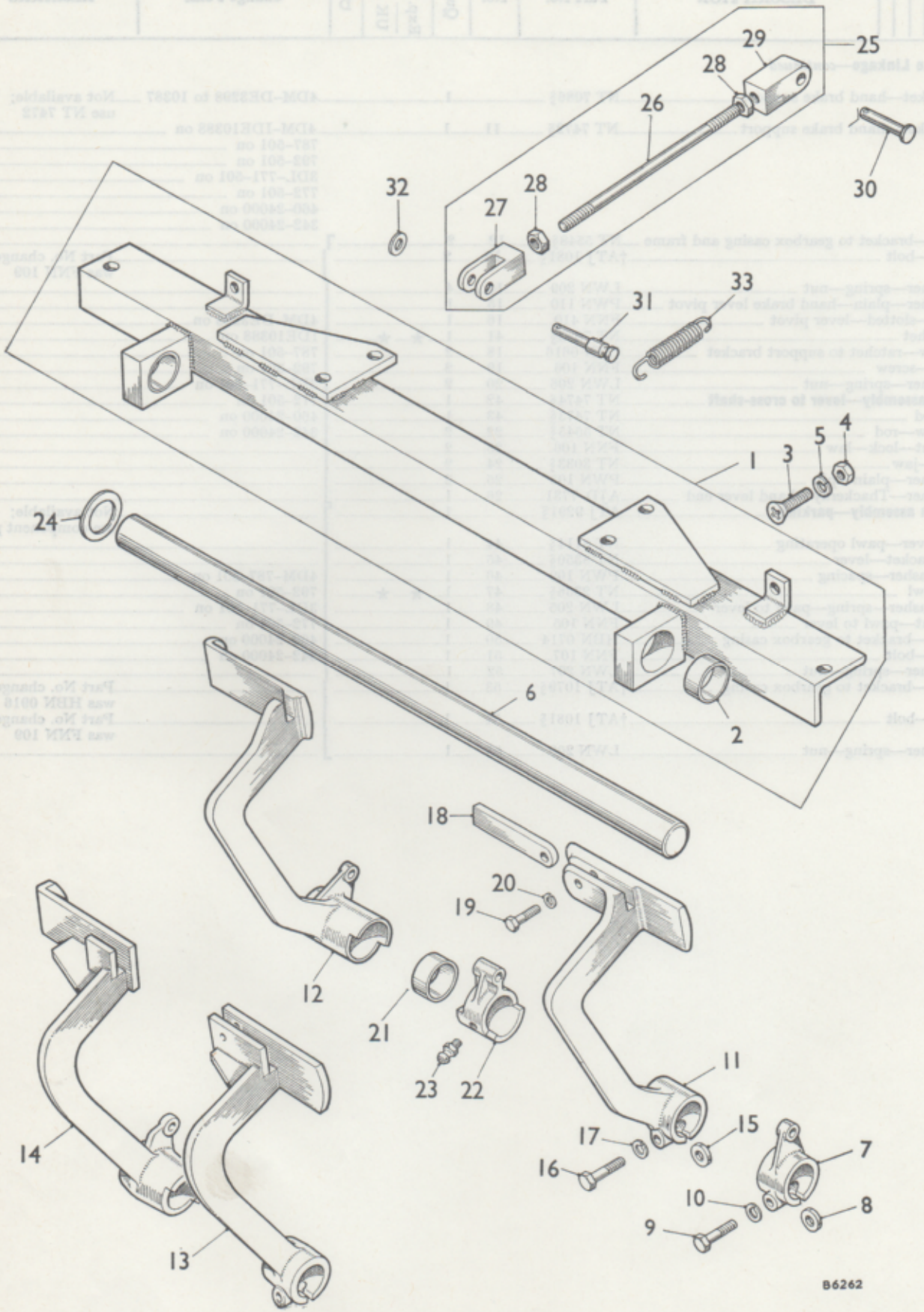
29
25
28
26
30
32
28
27
33
31
1
3
5
4
24
6
2
18
20
19
12
21
23
22
11
17
15
7
16
10
8
9
14
13
B6262